TIMMINS

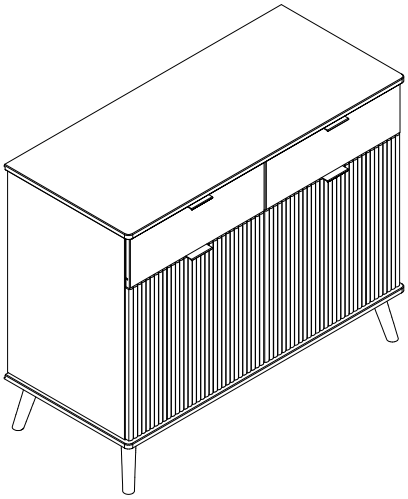

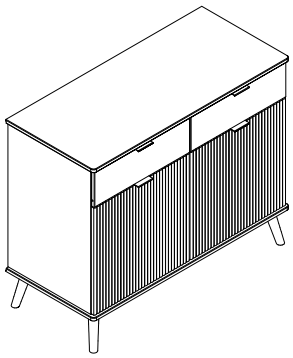

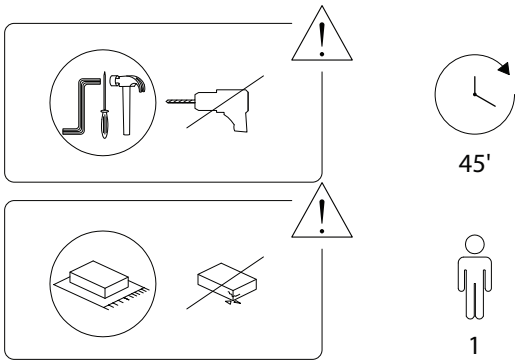
45'
1

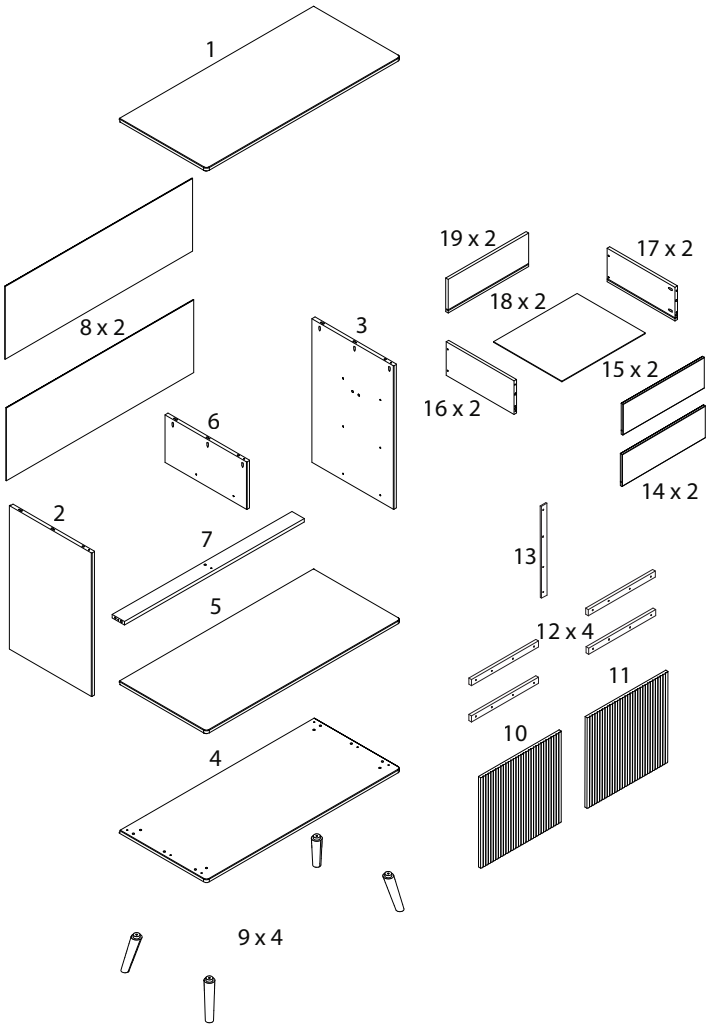
1
8 x 2
3
19 x 2
17 x 2
18 x 2
15 x 2
16 x 2
6
14 x 2
2
7
13
5
12 x 4
11
10
4
9 x 4

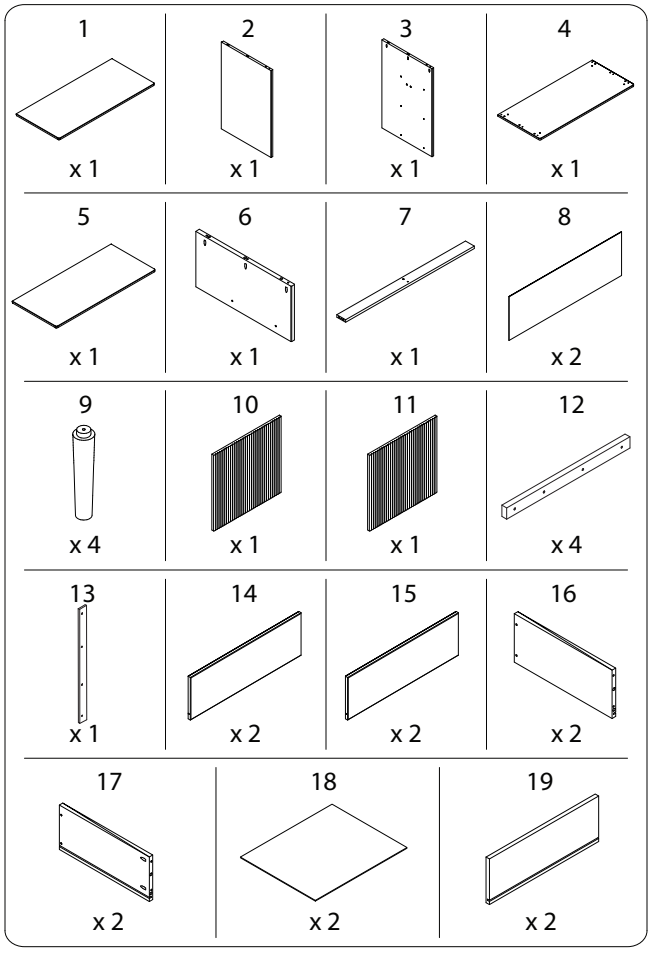
1
x 1
2
x 1
3
x 1
4
x 1
5
x 1
6
x 1
7
x 1
8
x 2
9
x 4
10
x 1
11
x 1
12
x 4
13
x 1
14
x 2
15
x 2
16
x 2
17
x 2
18
x 2
19
x 2

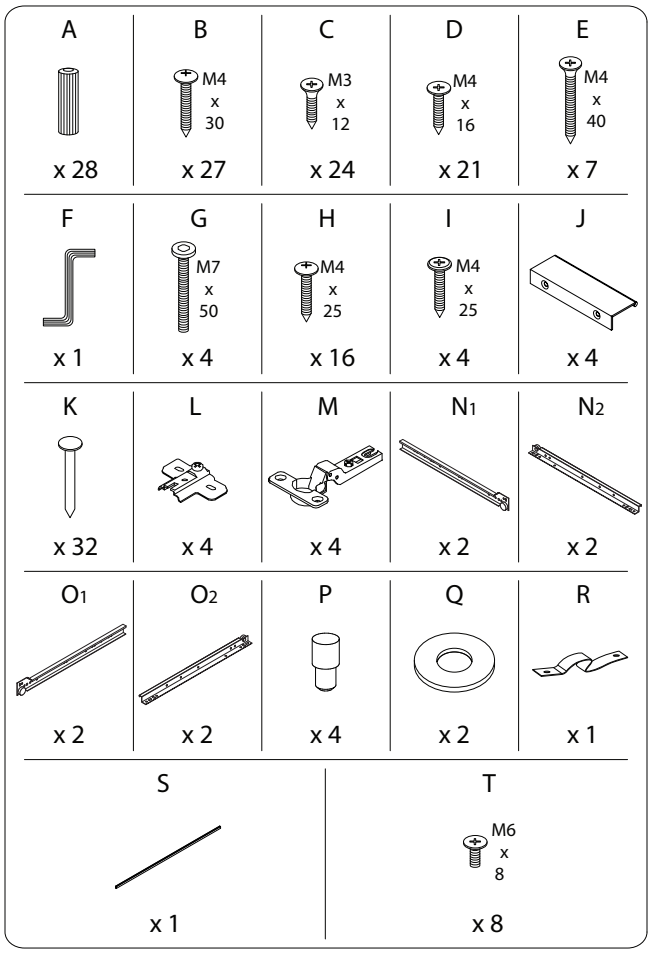
A
x 28
B
M4 x 30
x 27
C
M3 x 12
x 24
D
M4 x 16
x 21
E
M4 x 40
x 7
F
x 1
G
M7 x 50
x 4
H
M4 x 25
x 16
I
M4 x 25
x 4
J
x 4
K
x 32
L
x 4
M
x 4
N1
x 2
N2
x 2
O1
x 2
O2
x 2
P
x 4
Q
x 2
R
x 1
S
x 1
T
M6 x 8
x 8

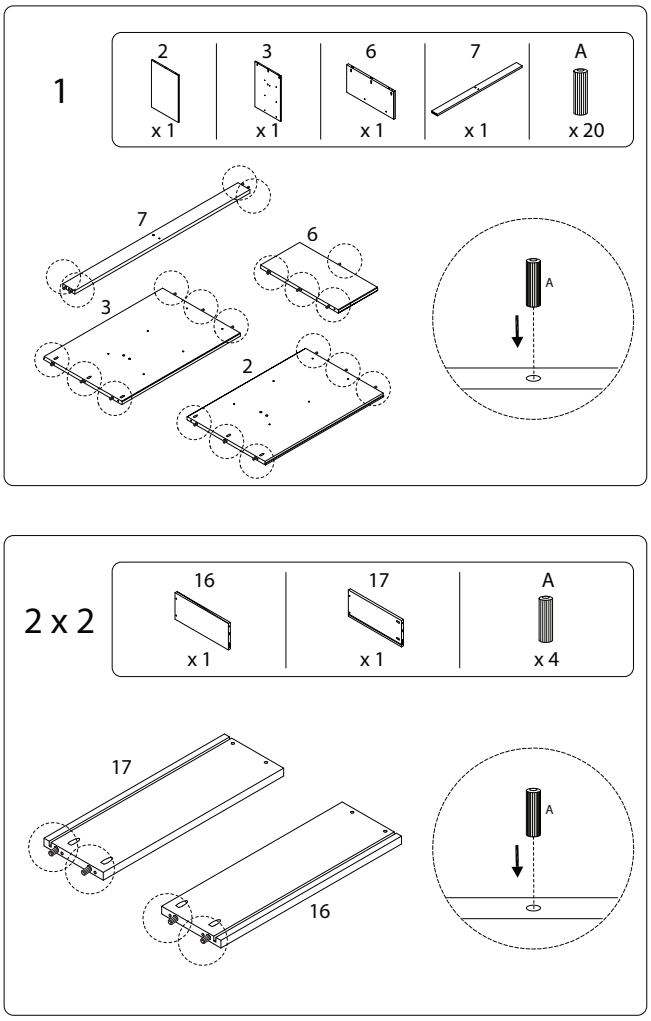
1
2 x 1
3 x 1
6 x 1
7 x 1
A x 20
7
6
3
2
A
2 x 2
16 x 1
17 x 1
A x 4
17
16
A

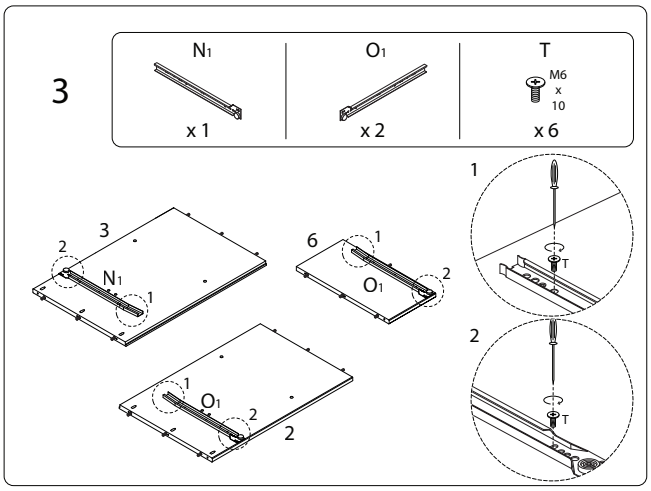
3
N1 x 1
O1 x 2
T M6 x 10 x 6
N1
O1
T

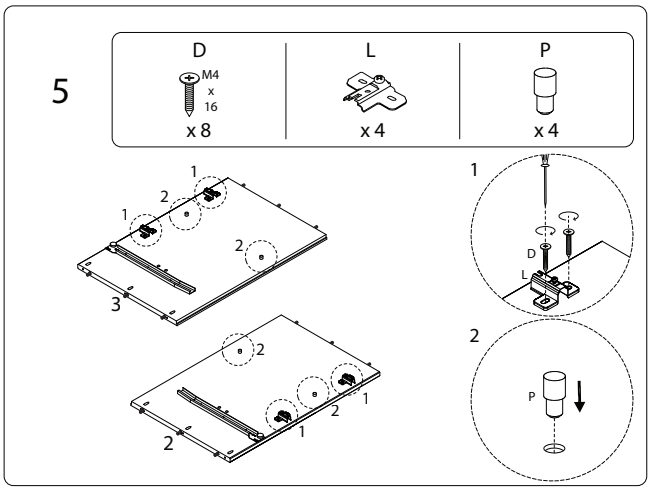
5
D M4 x 16 x 8
L x 4
P x 4
D
L
P

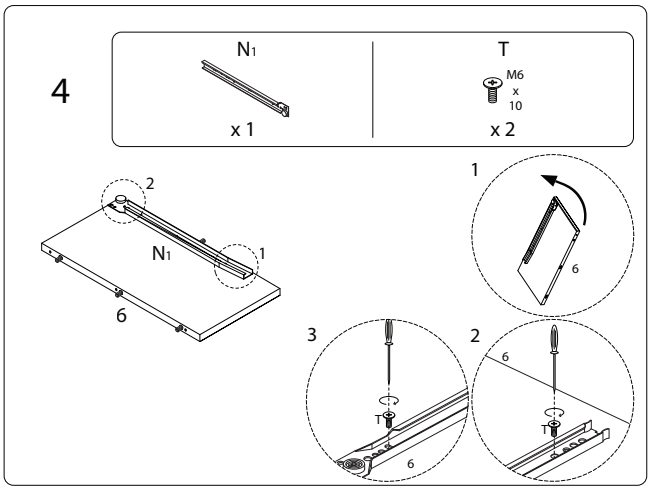
4
N1 x 1
T M6 x 10 x 2
N1
6
T

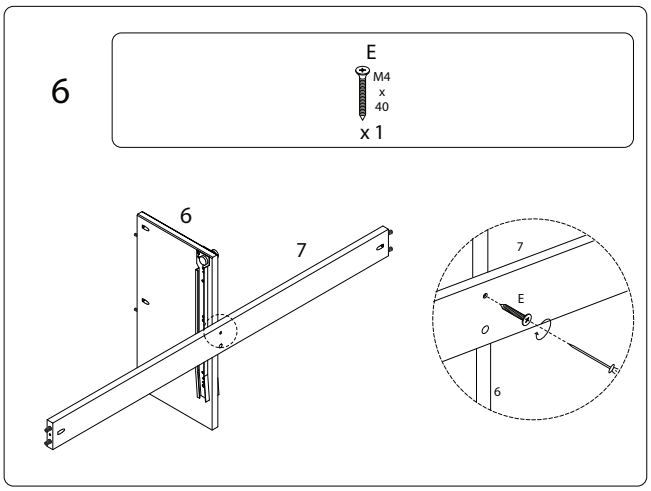
6
E M4 x 40 x 1
6
7
E

7

B
M4 x 30
x 2

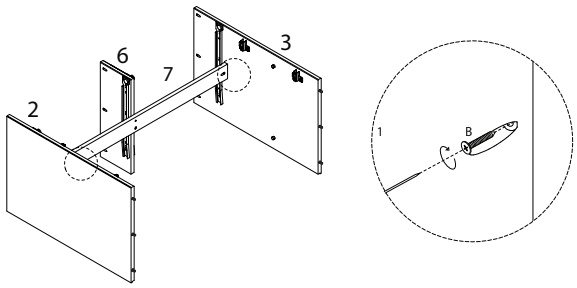

8

1	B
x 1	M4 x 30 x 9

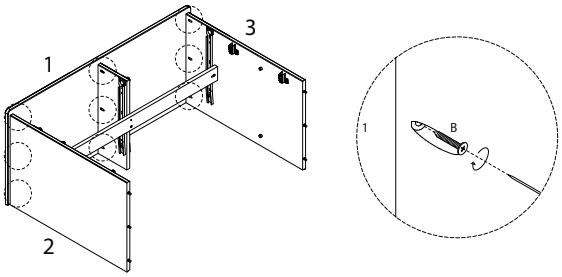

9

4	9	F	G
x 1	x 4	x 1	M7 x 50 x 4

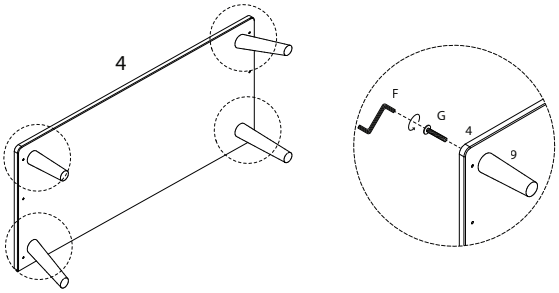

10

E
M4 x 40
x 6

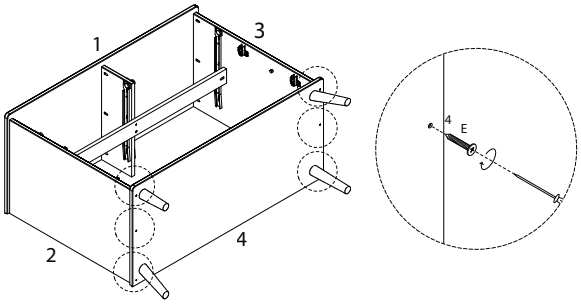

11

8	S
x 2	x 1

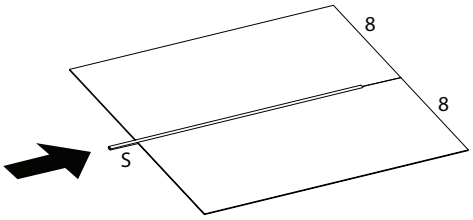

12

K
x 32

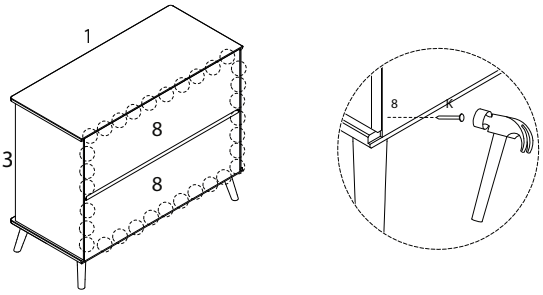

13

D	Q	R		
M4 x 16				
x 1	x 2	x 1	x 1	x 1

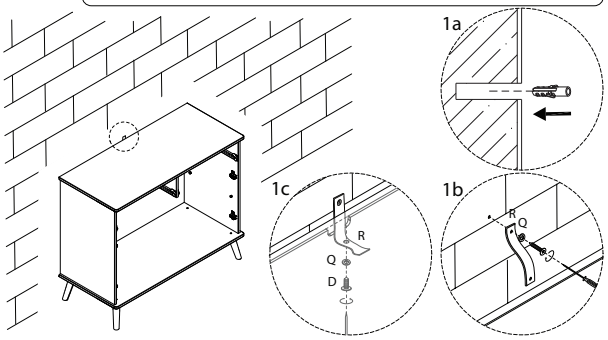

14 x 2

14	15	B
x 1	x 1	M4 x 30 x 8

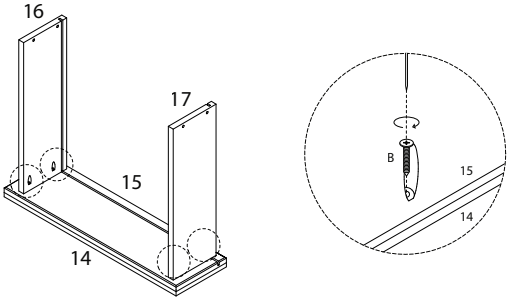

15 x 2

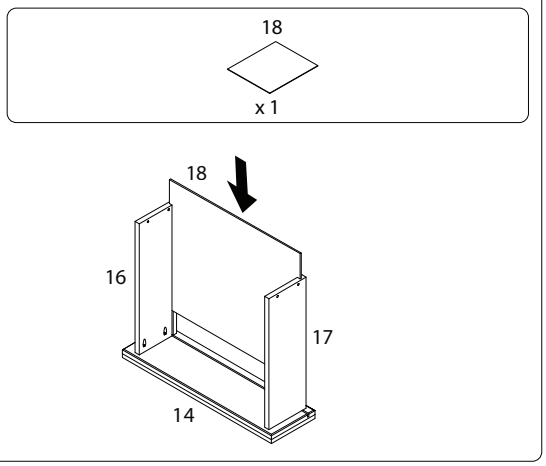

16 x 2

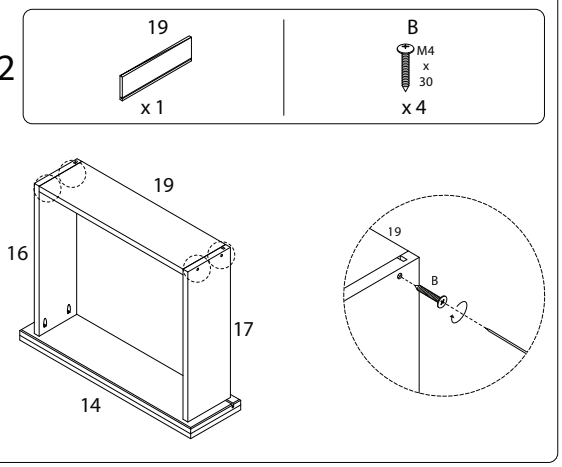

17 x 2

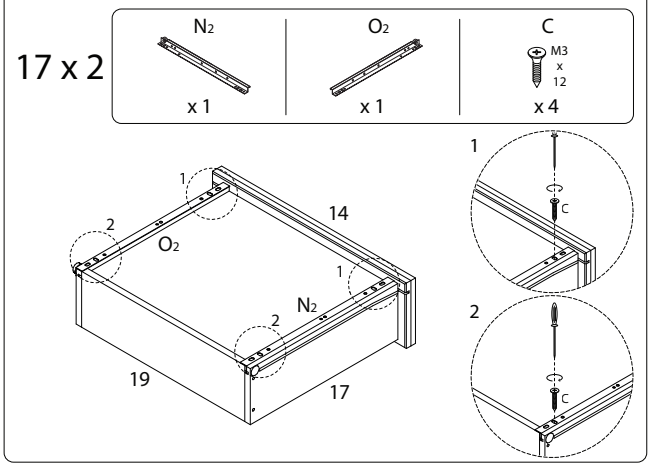

18 x 2

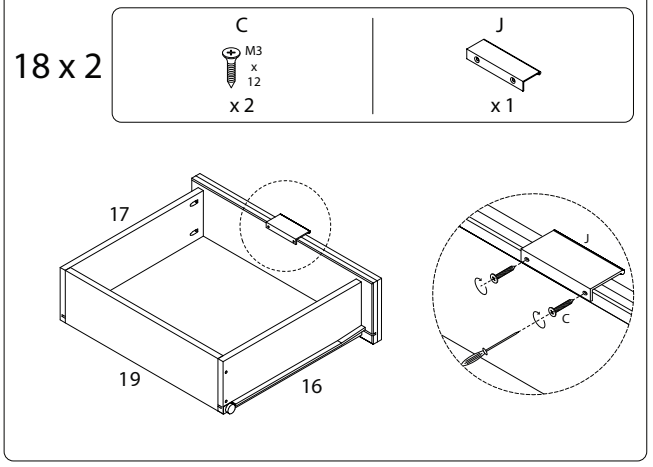

19

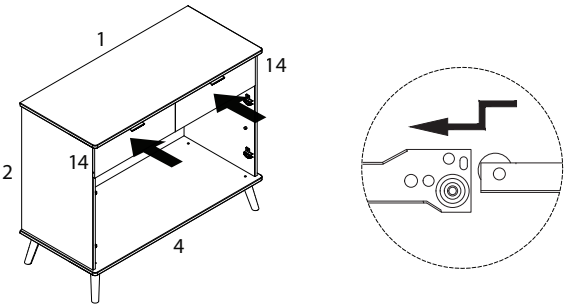

20

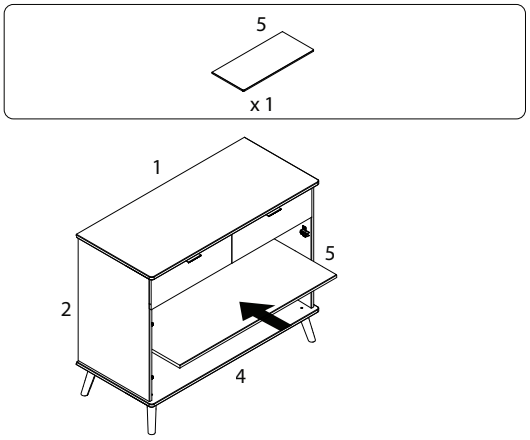

21

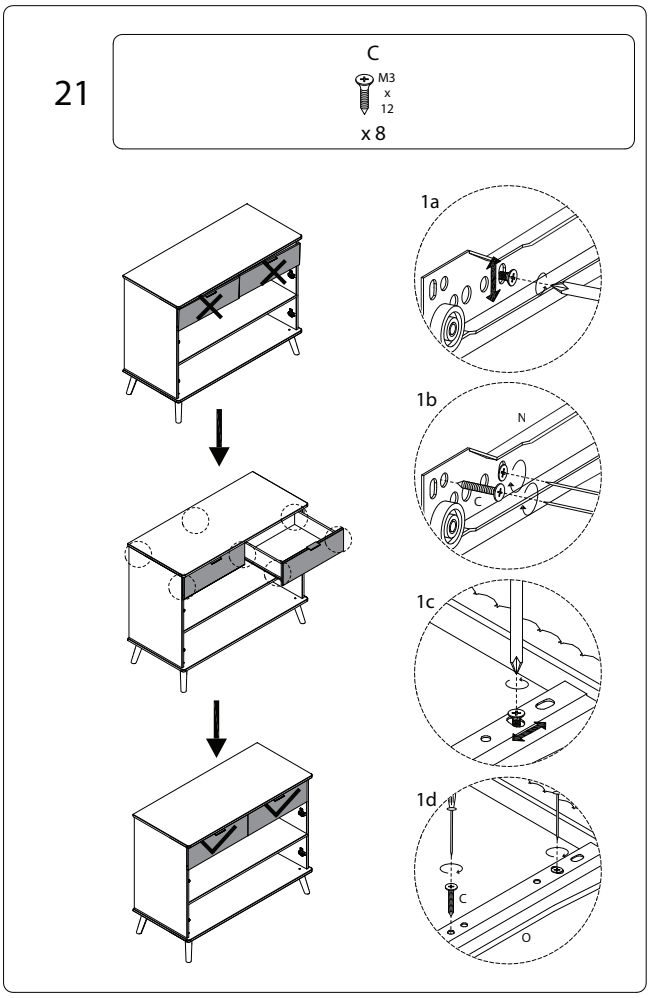

22

10	11	12	H
x 1	x 1	x 4	M4 x 25 x 16

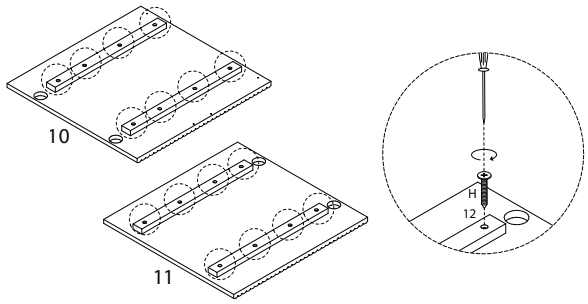

23

D	M
M4 x 16 x 8	x 4

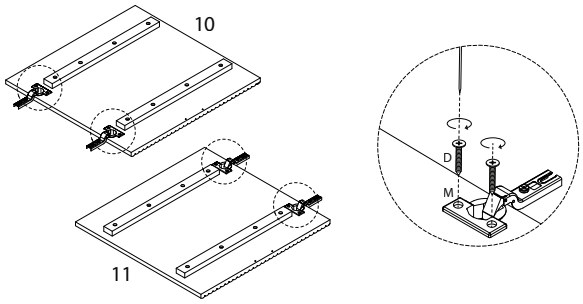

24

13	D
x 1	M4 x 16 x 4

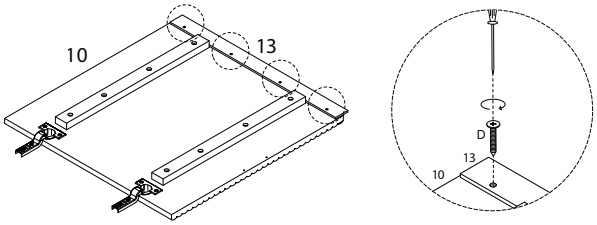

25

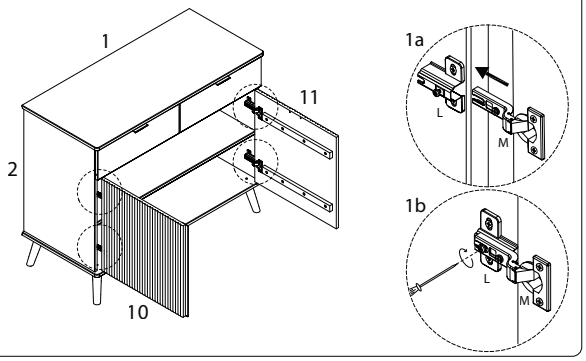

26

C	J
M3 x 12 x 4	x 2

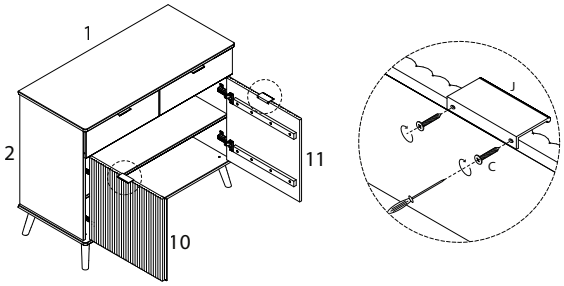

21
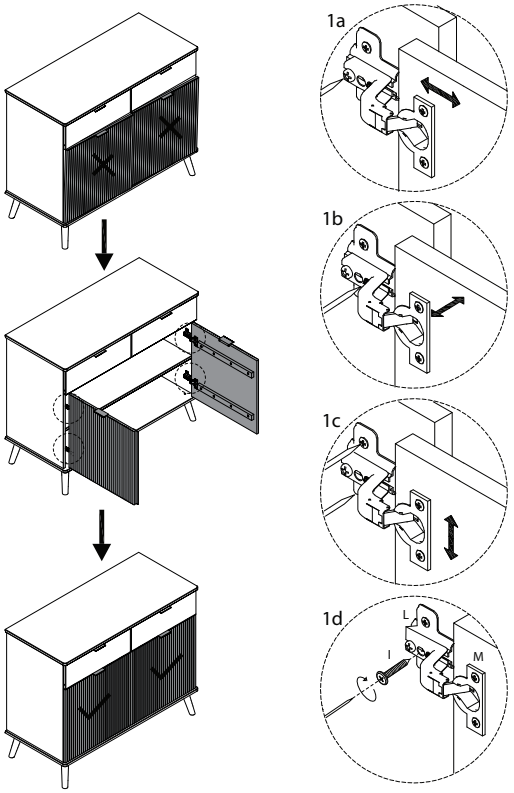
I
M4 x 25 x 4