# UNSTAD

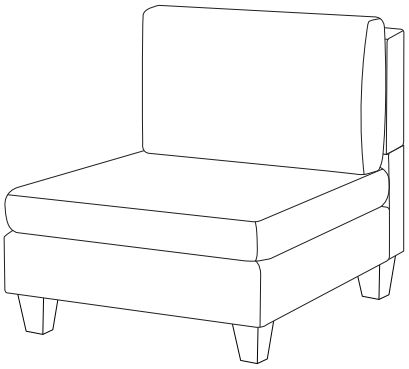

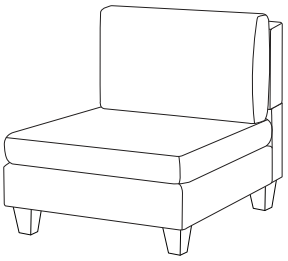

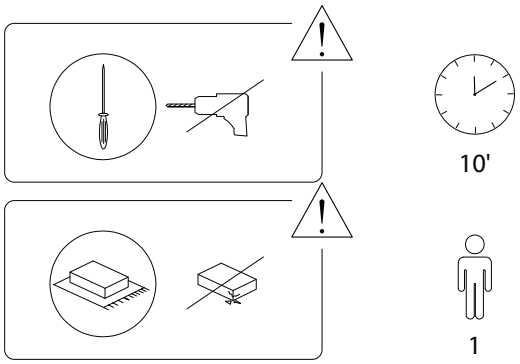


Beliani



Beliani
600/UNSTAD/240124/

| A1 | B | C |
|---|---|---|
| x 1 | x 1 | x 1 |

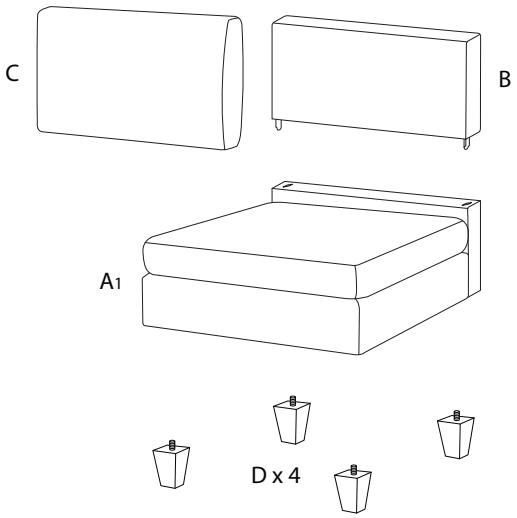


| D | E | F | G |
|---|---|---|---|
| x 4 | x 2 | x 2 | M5 x 20 x 8 |



Beliani
600/UNSTAD/240124/

!

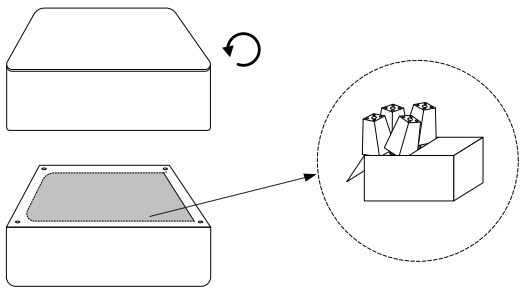

1

| A1 | D |
|---|---|
| x 1 | x 4 |

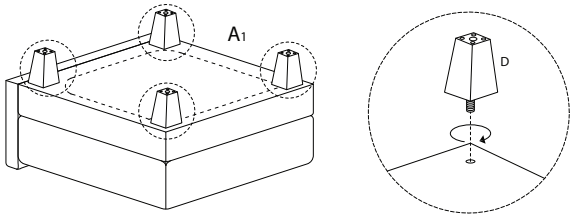




Beliani
600/UNSTAD/240124/

2

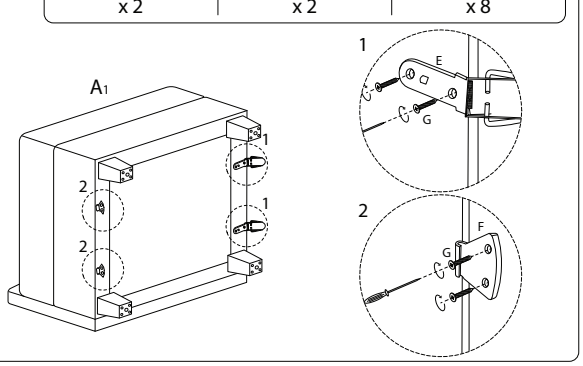


3

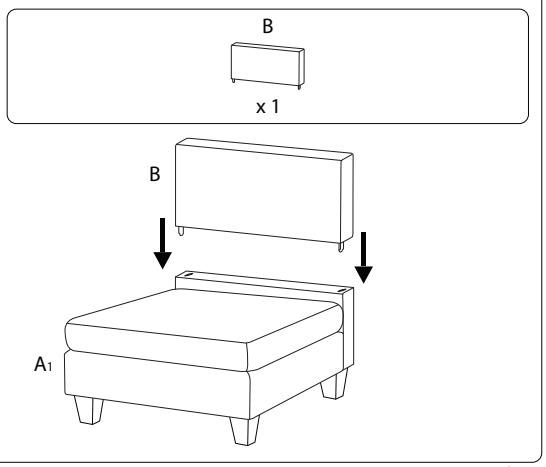




Beliani
600/UNSTAD/240124/

4

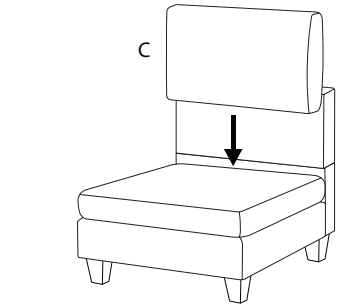




Beliani
600/UNSTAD/240124/

!

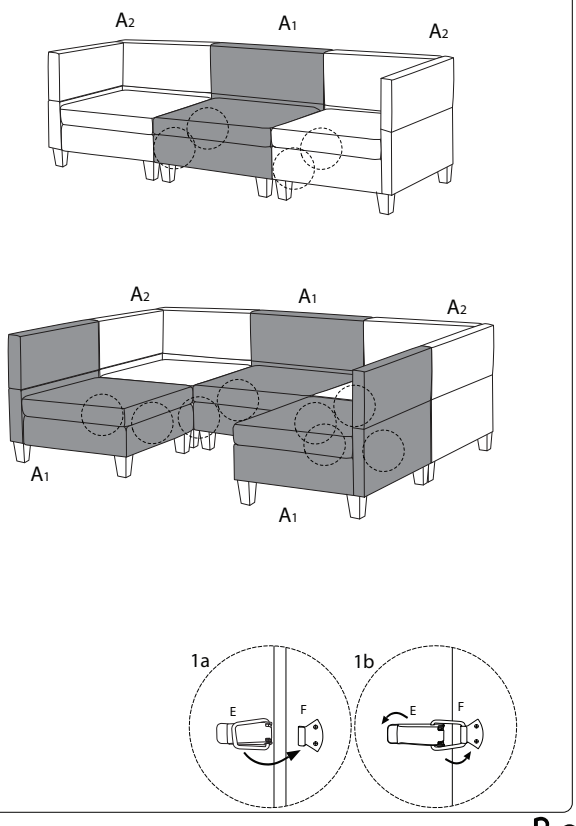




Beliani
600/UNSTAD/240124/