GENOA

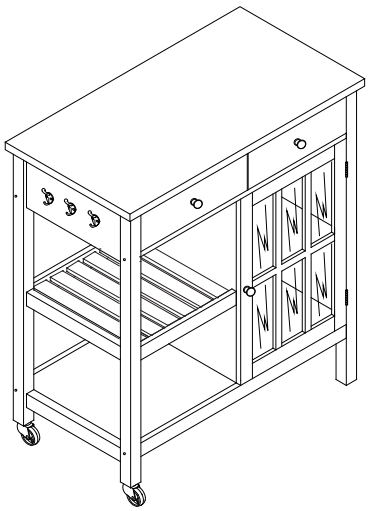

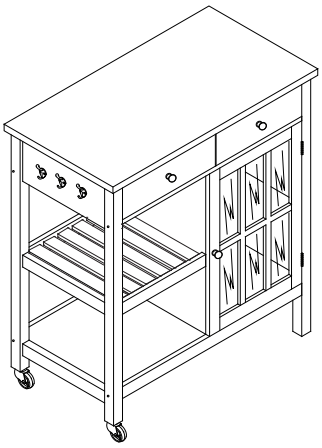

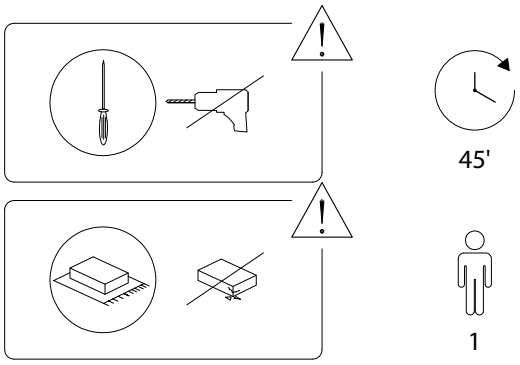

1/23

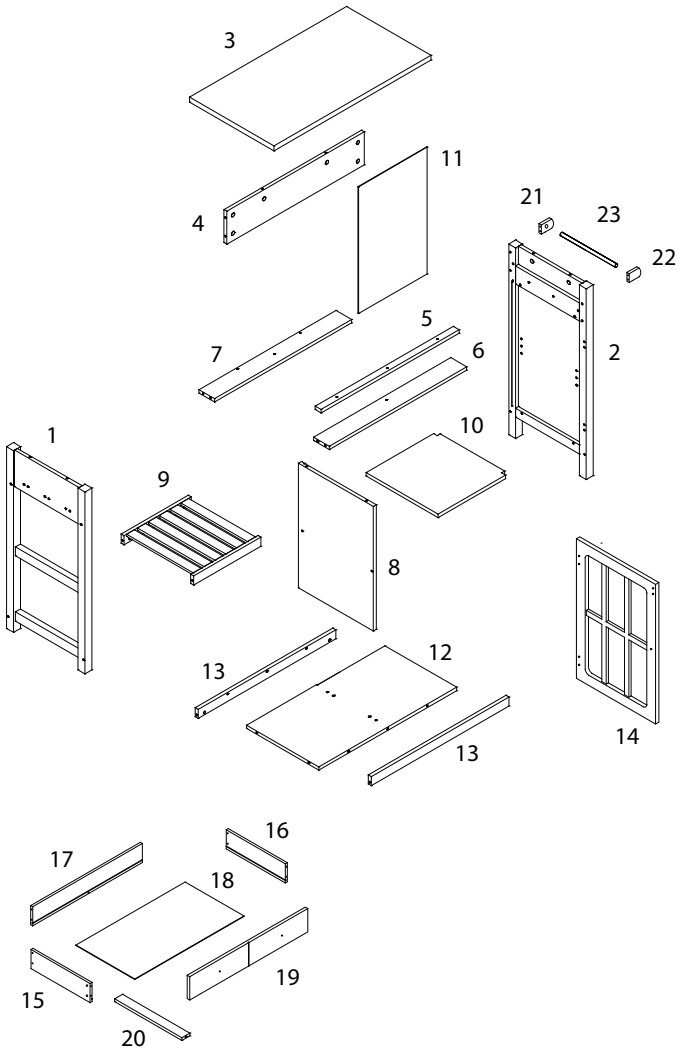

2/23

1  x 1	2  x 1	3 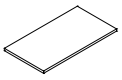 x 1	4 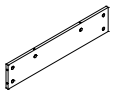 x 1
5 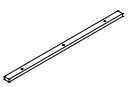 x 1	6 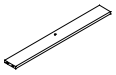 x 1	7 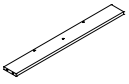 x 1	8 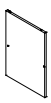 x 1
9 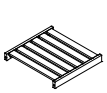 x 1	10 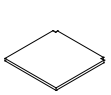 x 1	11  x 1	12 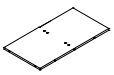 x 1	13  x 2
14  x 1	15  x 1	16  x 1	17  x 1	18 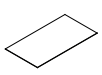 x 1
19  x 1	20  x 1	21  x 1	22  x 1	23  x 1

3/23

680/GENOA/260225/

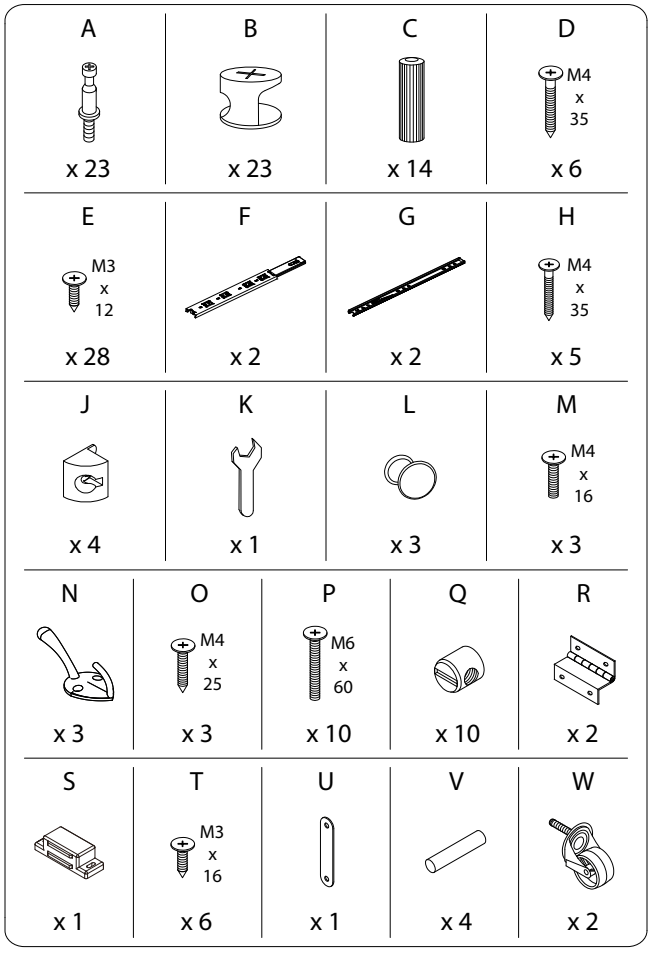
A
x 23
B
x 23
C
x 14
D
M4 x 35
x 6
E
M3 x 12
x 28
F
x 2
G
x 2
H
M4 x 35
x 5
J
x 4
K
x 1
L
x 3
M
M4 x 16
x 3
N
x 3
O
M4 x 25
x 3
P
M6 x 60
x 10
Q
x 10
R
x 2
S
x 1
T
M3 x 16
x 6
U
x 1
V
x 4
W
x 2

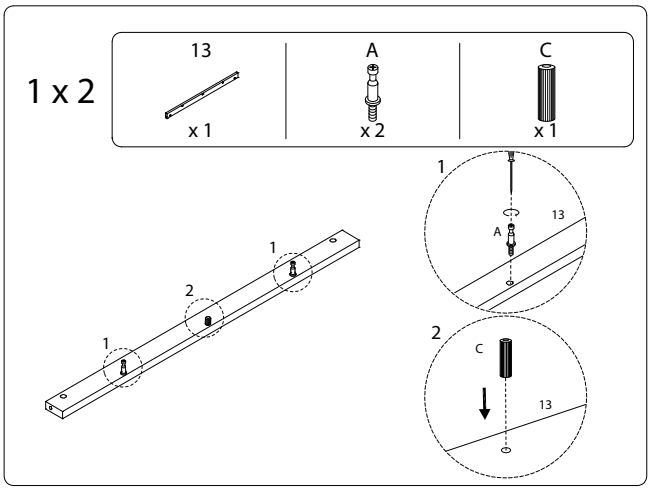
1 x 2
13
x 1
A
x 2
C
x 1
1
2
1
1
13
A
2
C
13

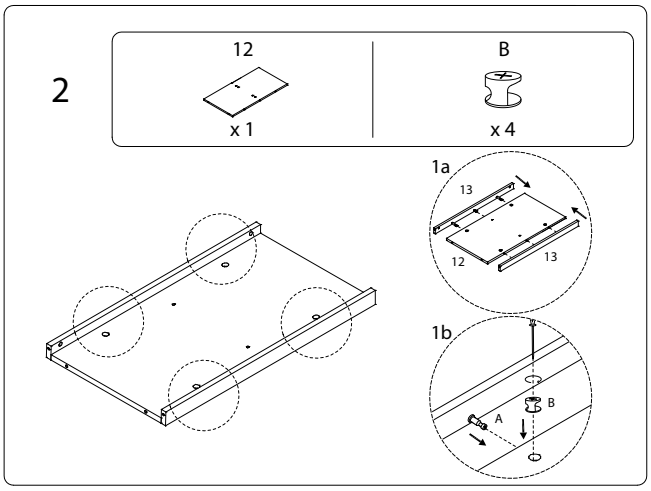
2
12
x 1
B
x 4
1a
13
12
13
1b
A
B

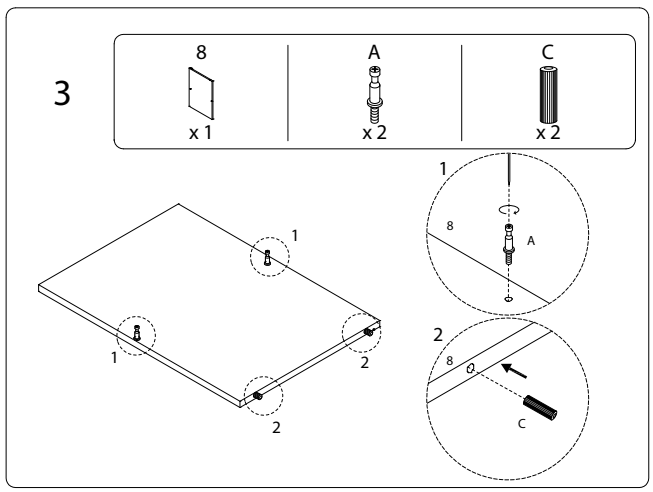
3
8
x 1
A
x 2
C
x 2
1
1
2
2
1
8
A
2
8
C

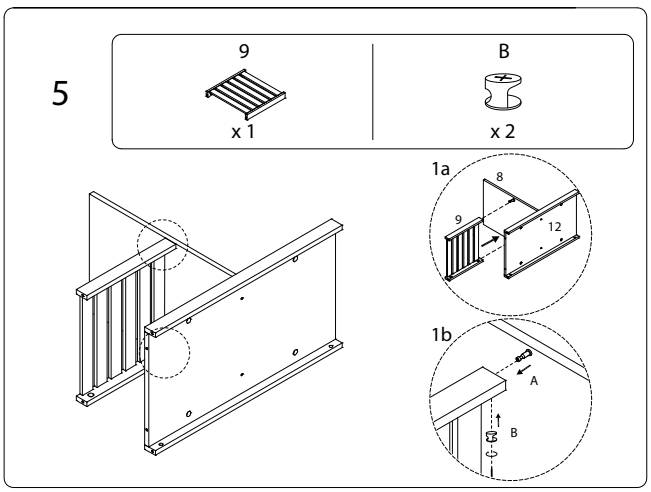
5
9
x 1
B
x 2
1a
8
9
12
1b
A
B

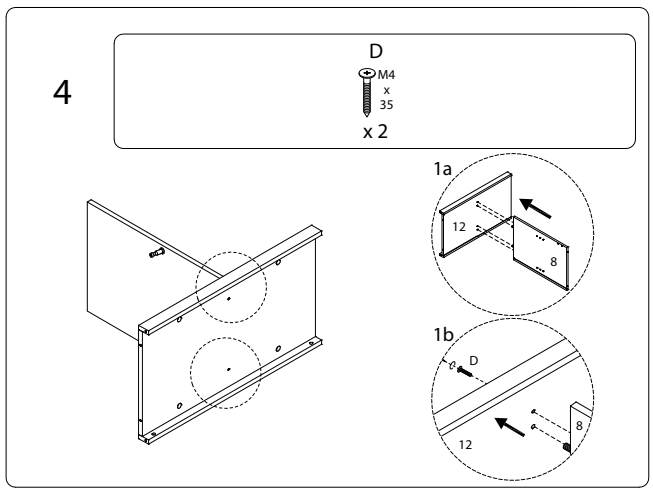
4
D
M4 x 35
x 2
1a
12
8
1b
D
8
12

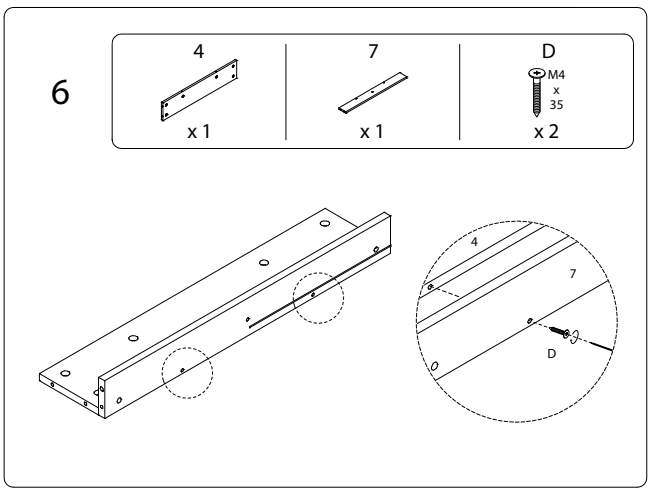
6
4
x 1
7
x 1
D
M4 x 35
x 2
4
7
D

7

D
M4 x 35
x 1

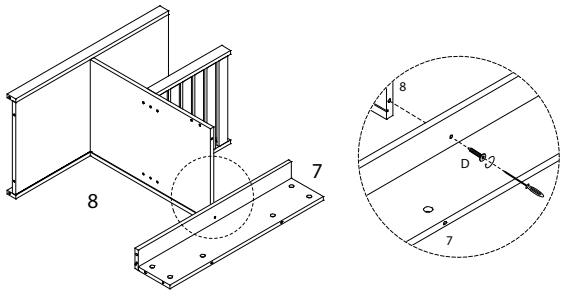

8

6
x 1

D
M4 x 35
x 1

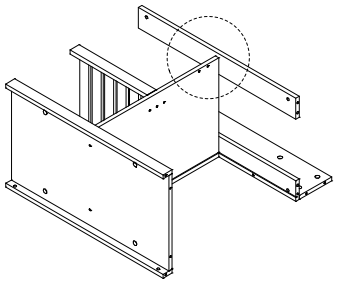

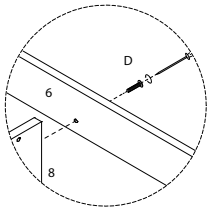

9

2
x 1

C
x 2

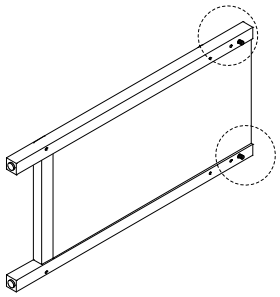

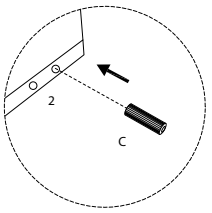

10

21
x 1

22
x 1

23
x 1

P
M6 x 60
x 2

Q
x 2

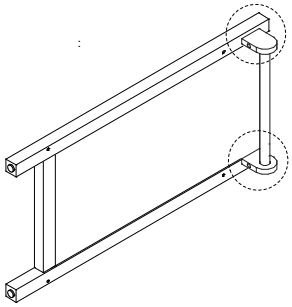

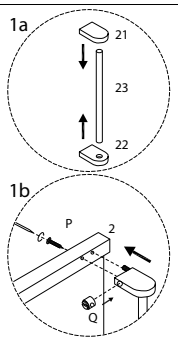

!

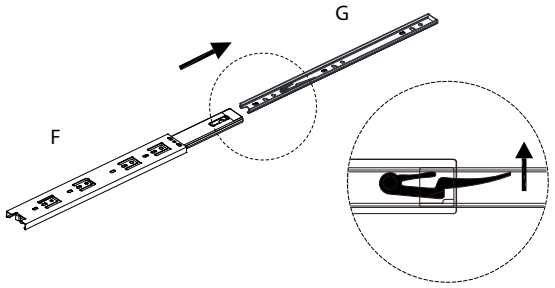

12

E
M3 x 12
x 3

F
x 1

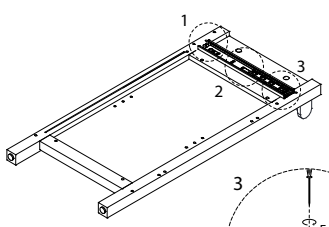

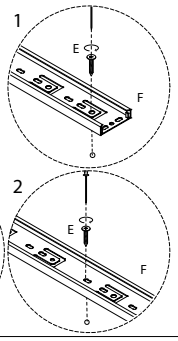

11

1
x 1

E
M3 x 12
x 3

F
x 1

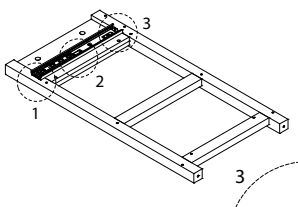

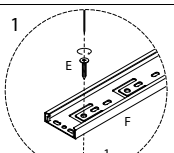

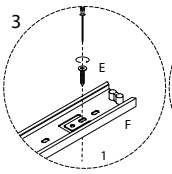

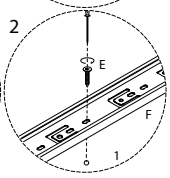

13

A
x 4

C
x 4

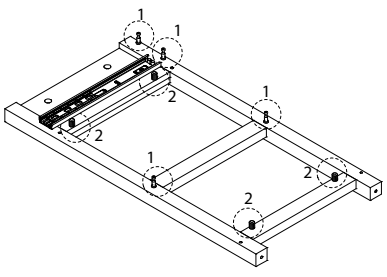

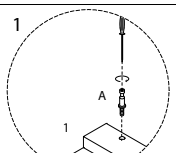

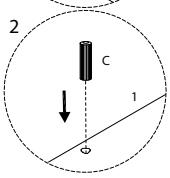

14

A x 2 | C x 4

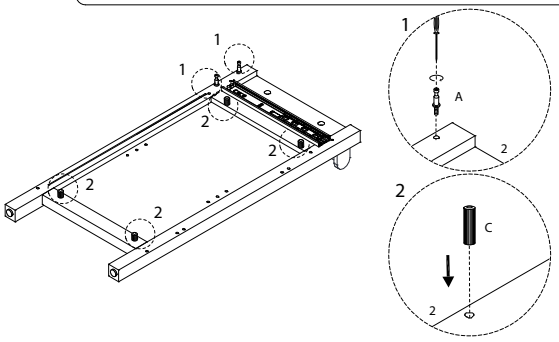

15

11 x 1

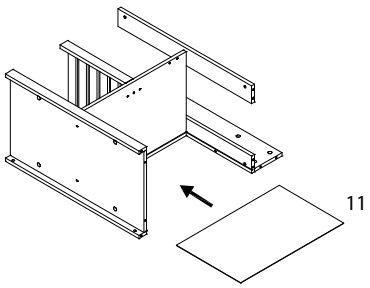

16

B x 2 | P M6 x 60 x 4 | Q x 4

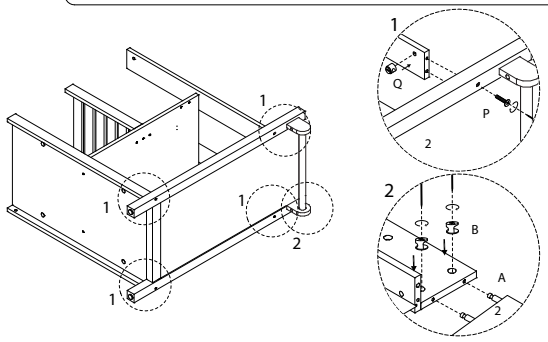

17

B x 4 | P M6 x 60 x 4 | Q x 4

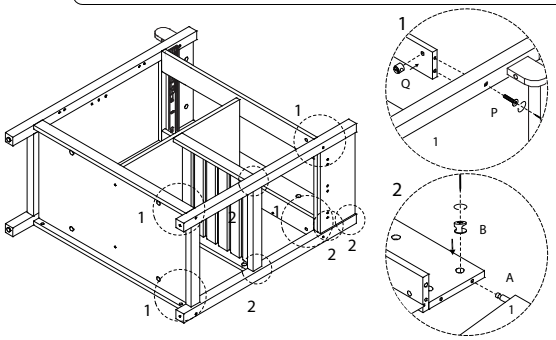

18

K x 1 | W x 2

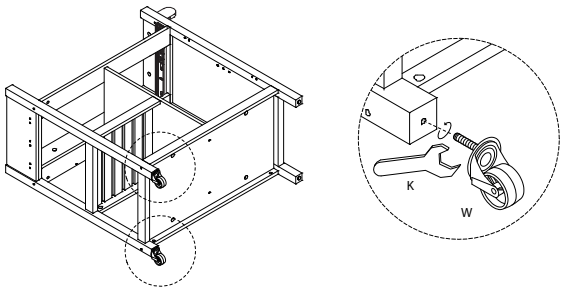

19

E M3 x 12 x 6 | N x 3 | S x 1 | T M3 x 16 x 2

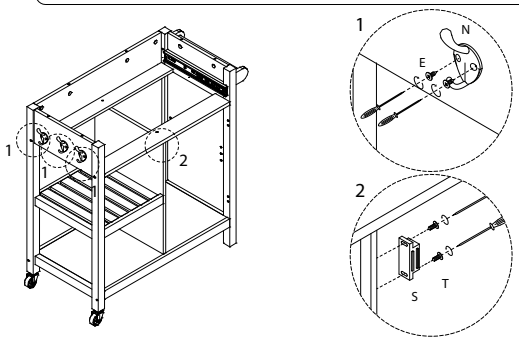

20

3 x 1 | 5 x 1 | A x 6 | O M4 x 25 x 3

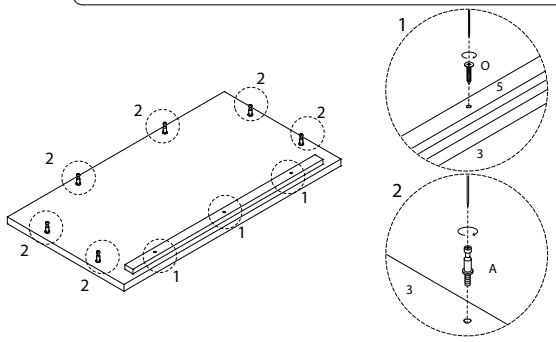

21

B x 6

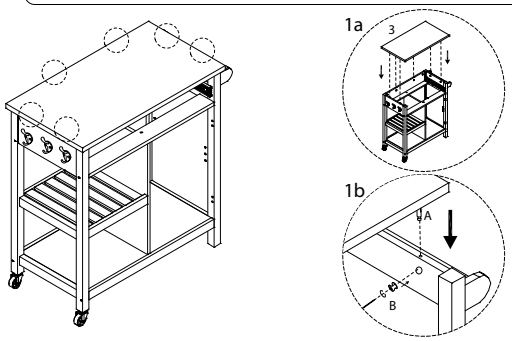

22

14	E	R	U
x 1	M3 x 12 x 6	x 2	x 1

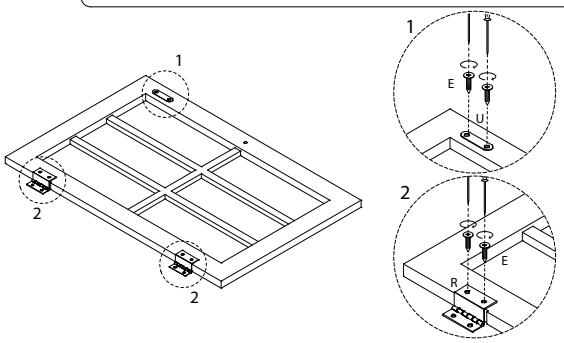

23

E
M3 x 12 x 4

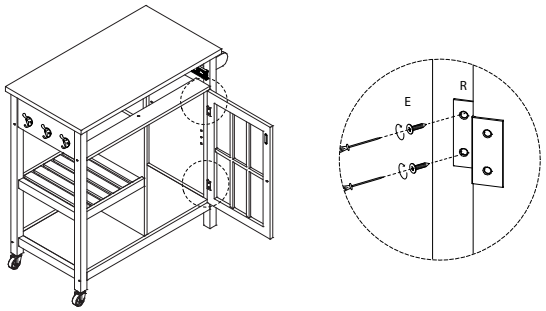

!

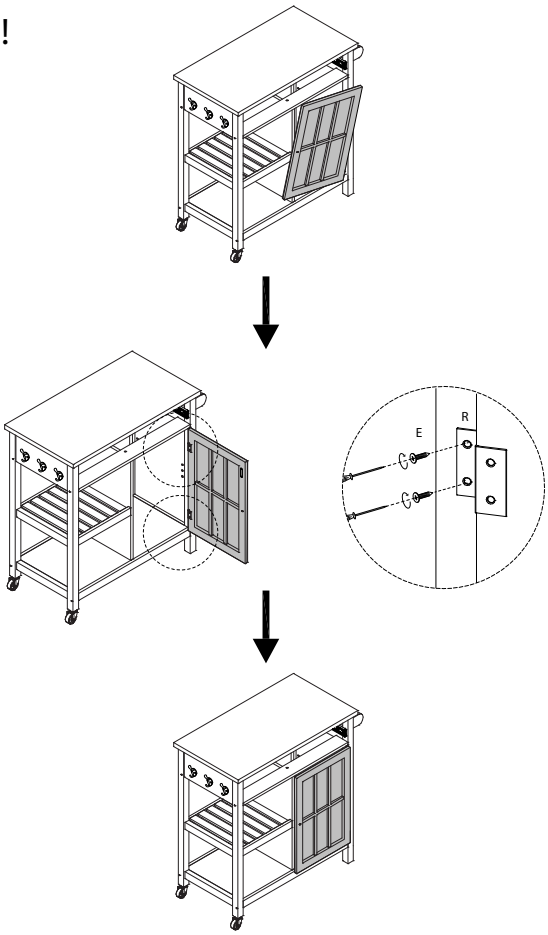

24

L	M
x 1	M4 x 16 x 1

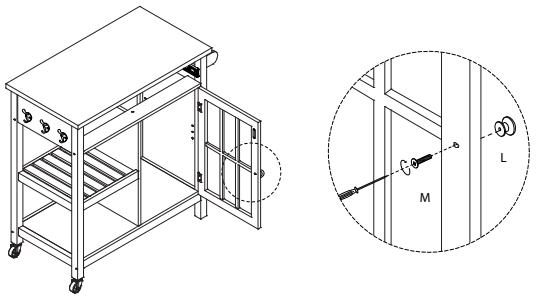

26

10
x 1

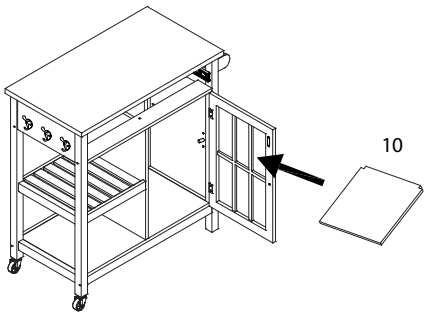

25

V
x 4

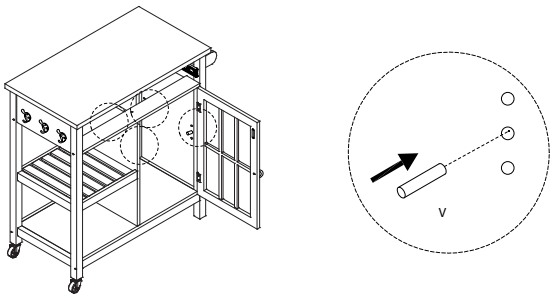

27

19	A
x 1	x 5

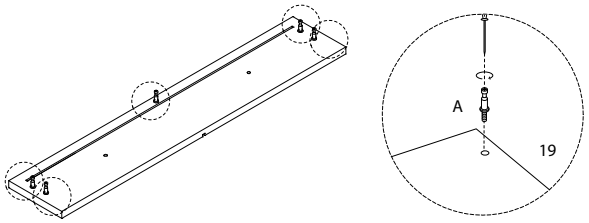

28

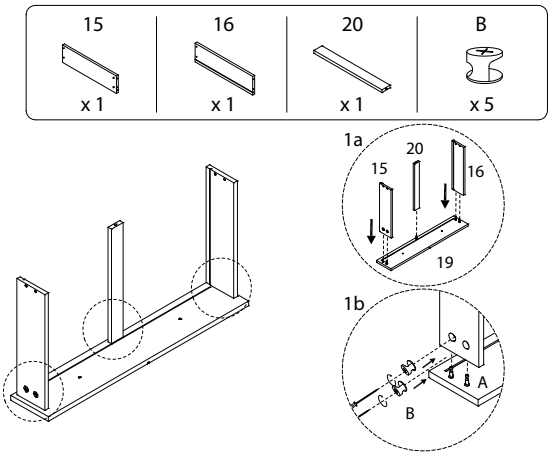

29

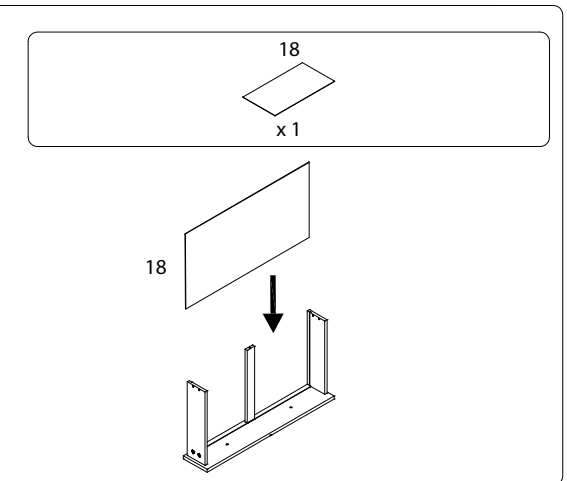

30

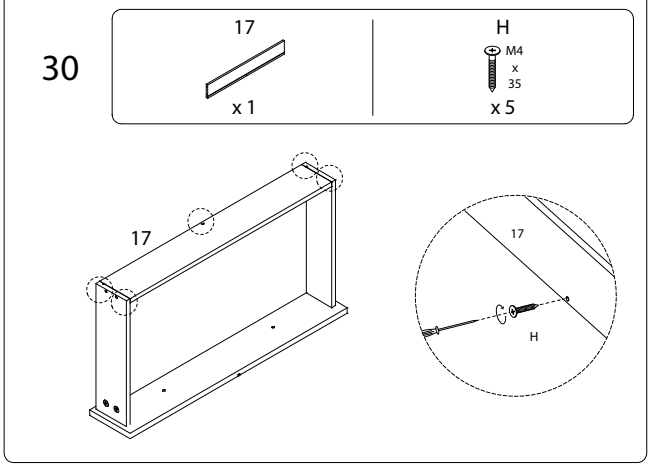

31

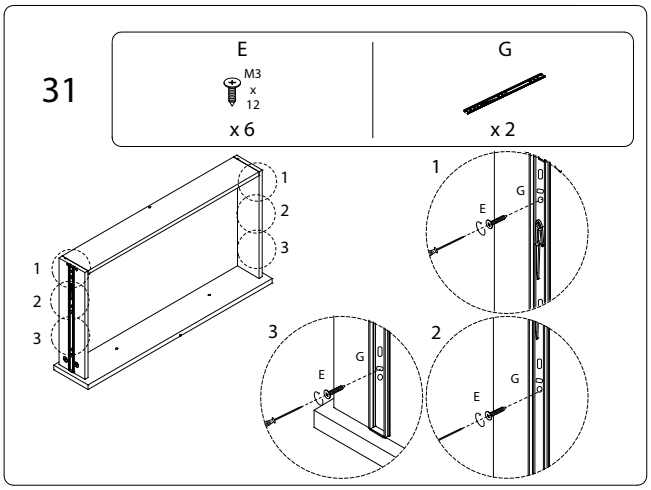

32

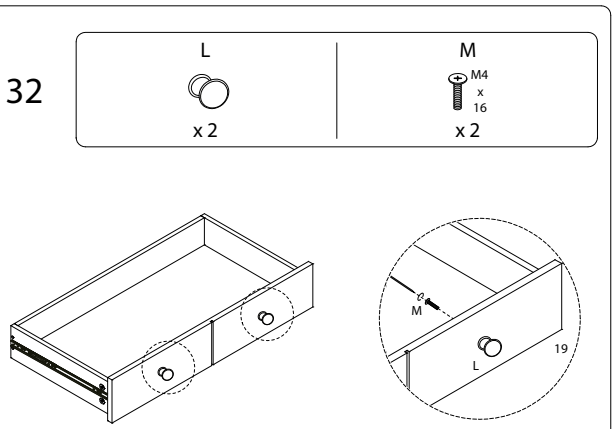

33

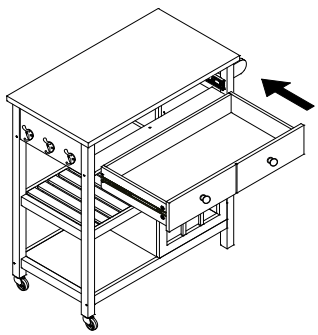

34

