ROSELL

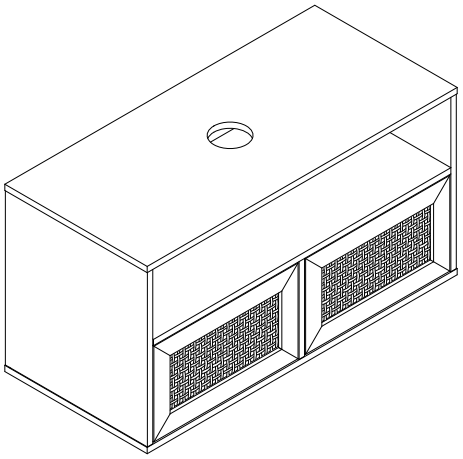

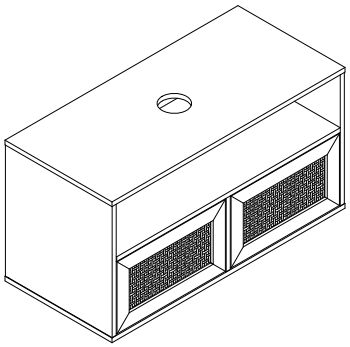

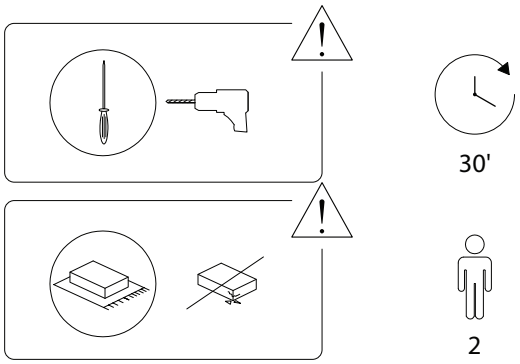

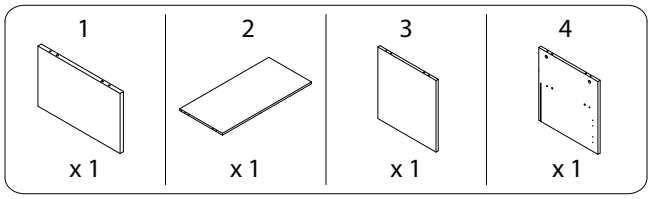

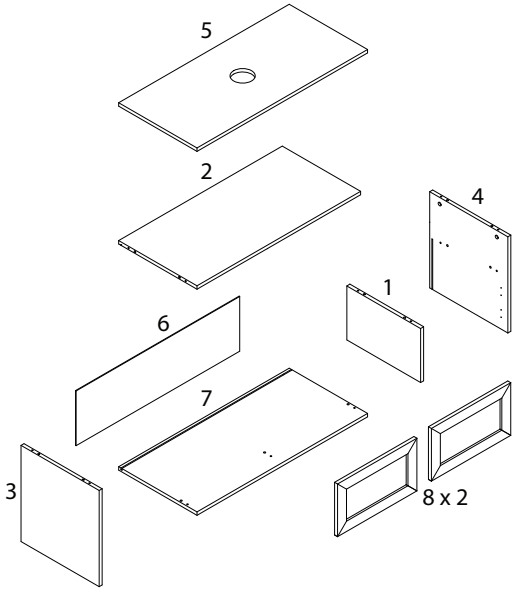

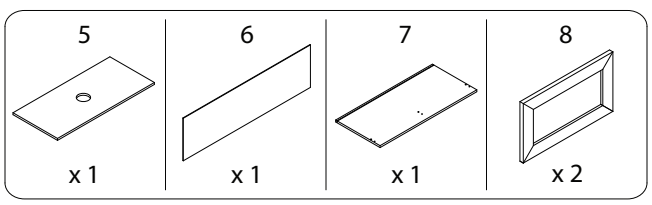

A x 10	B x 10	C x 16
D M3.5 x 14 x 20	E M5 x 40 x 6	F x 4
G x 4	H_1 x 4	H_2 M4 x 30 x 4
I_1 x 6	I_2 M3 x 16 x 6	J_1 x 2
J_2 x 2	K M4 x 14 x 8	L x 1

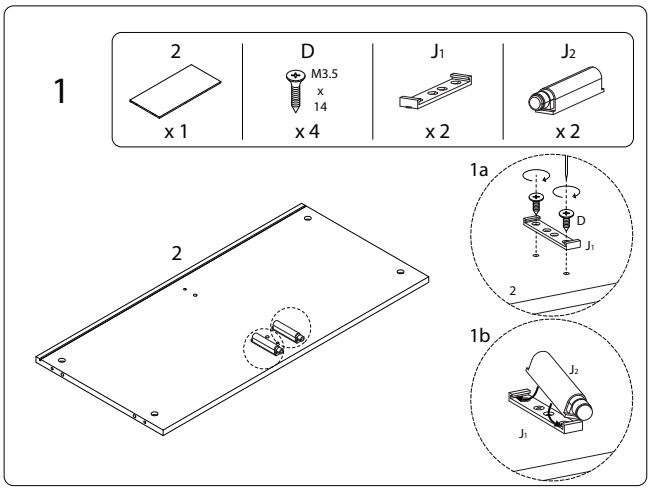
1
2
x 1
D
M3.5
x
14
x 4
J1
x 2
J2
x 2
2
1a
D
J1
2
1b
J2
J1

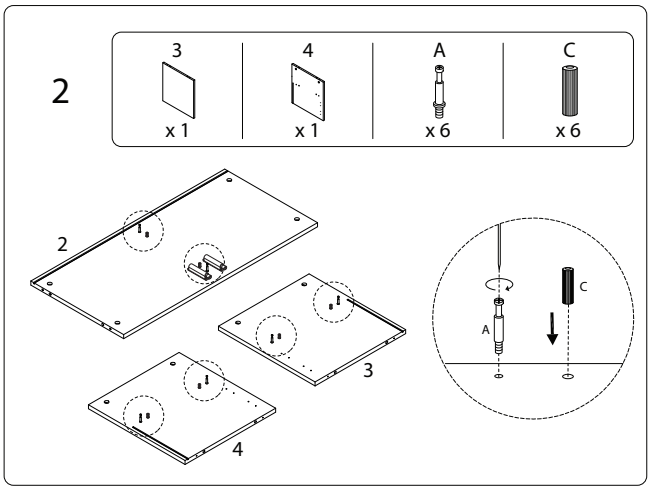
2
3
x 1
4
x 1
A
x 6
C
x 6
2
3
4
A
C

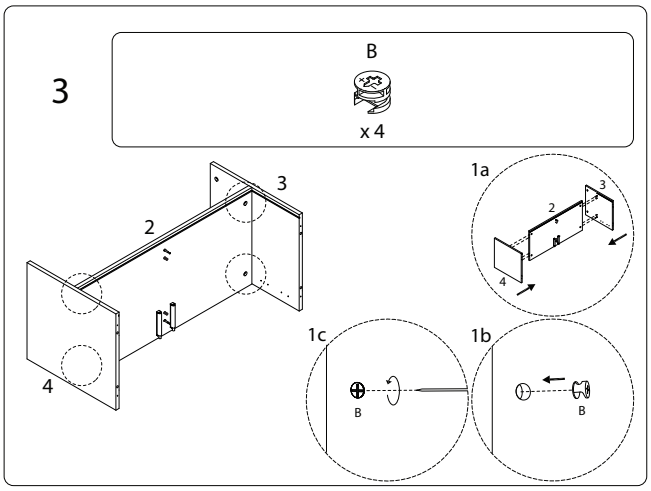
3
B
x 4
2
3
4
1a
2
3
4
1c
B
1b
B

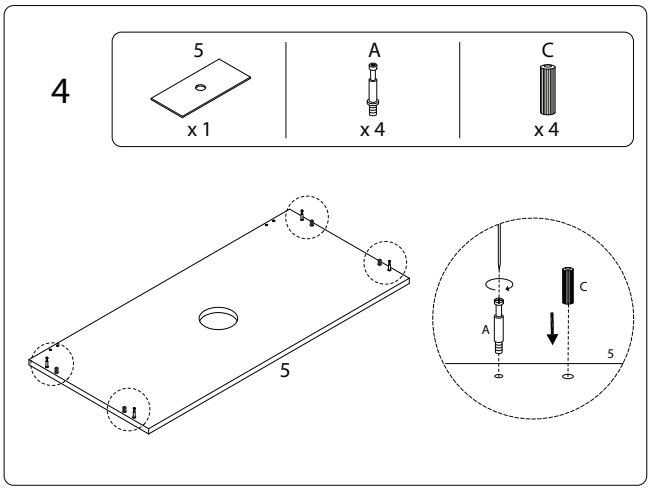
4
5
x 1
A
x 4
C
x 4
5
A
C
5

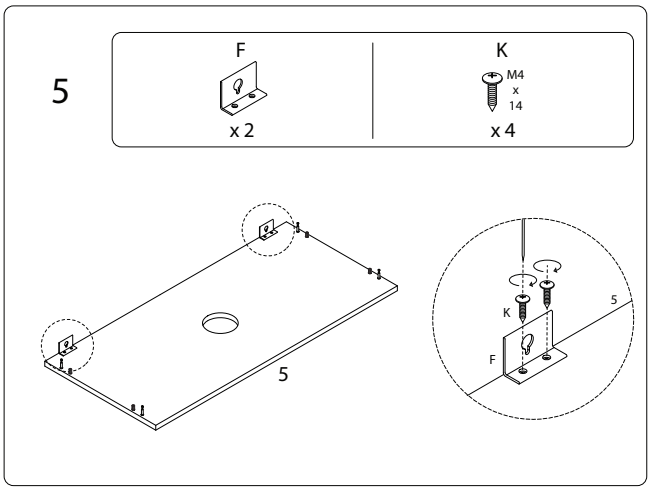
5
F
x 2
K
M4
x
14
x 4
5
K
F
5

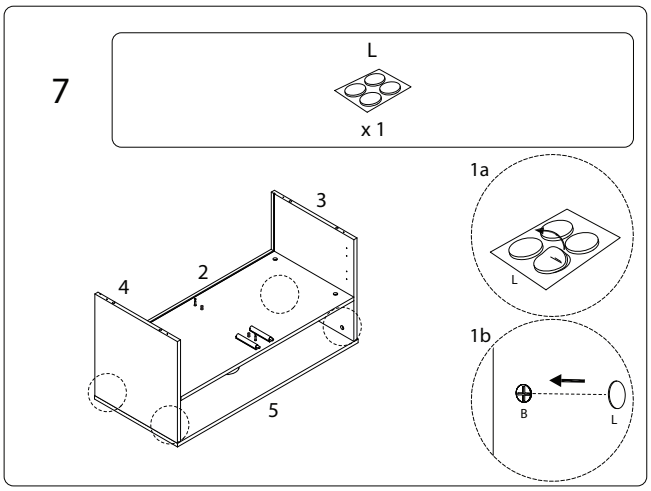
7
L
x 1
3
2
4
5
1a
L
1b
B
L

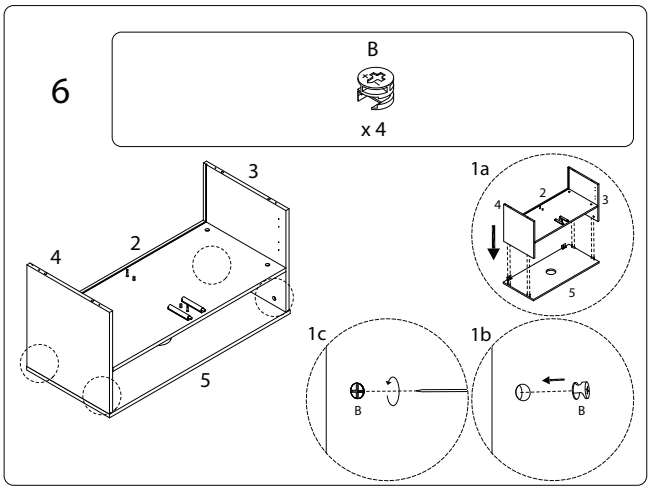
6
B
x 4
3
2
4
5
1a
2
3
4
5
1c
B
1b
B

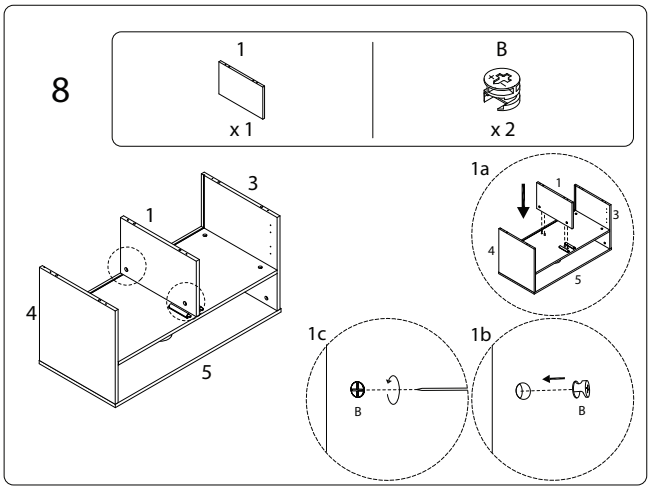
8
1
x 1
B
x 2
3
1
4
5
1a
1
3
4
5
1c
B
1b
B

9

C
x 6

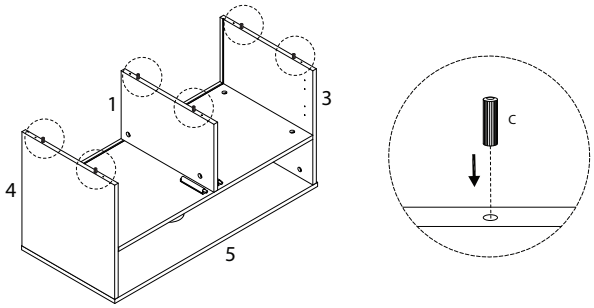

10

6
x 1

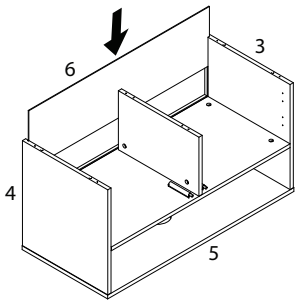

11

7
x 1

F
x 2

K
M4
x
14
x 4

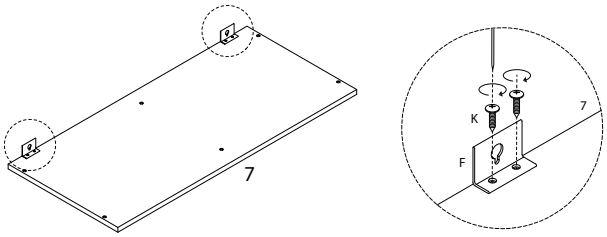

12

E
M5
x
40
x 6

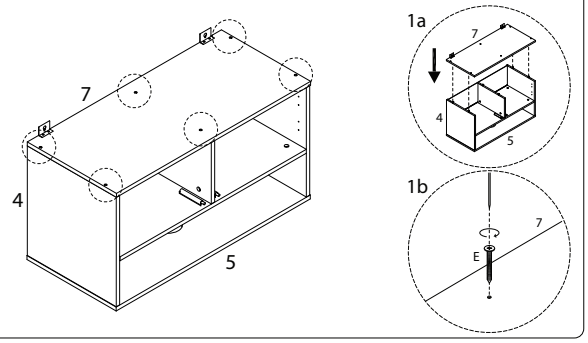

13 x 2

8
x 1

D
M3.5
x
14
x 4

G
x 2

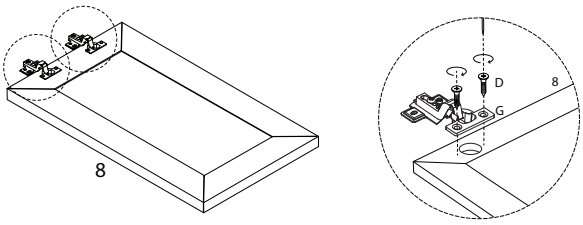

14

D
M3.5
x
14
x 8

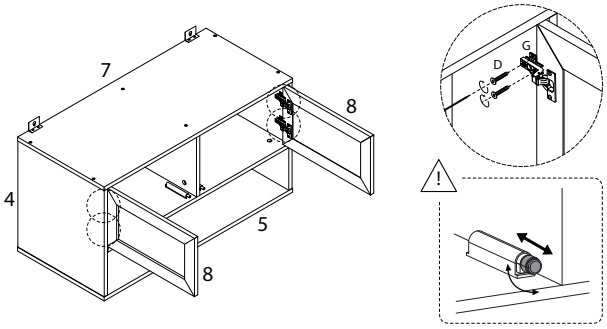

15

l_1
x 6

l_2
M3
x
16
x 6

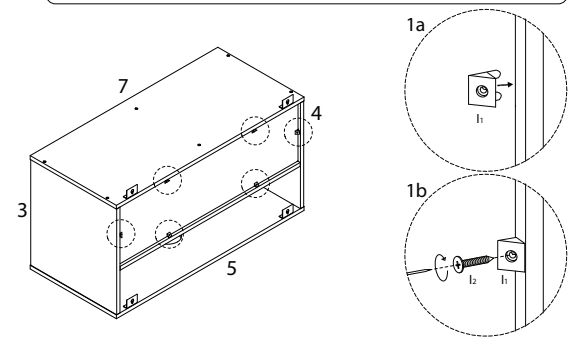

16

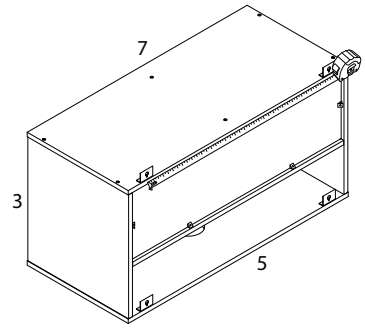

17

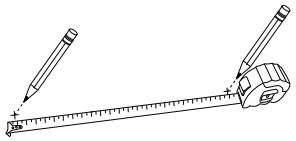

18

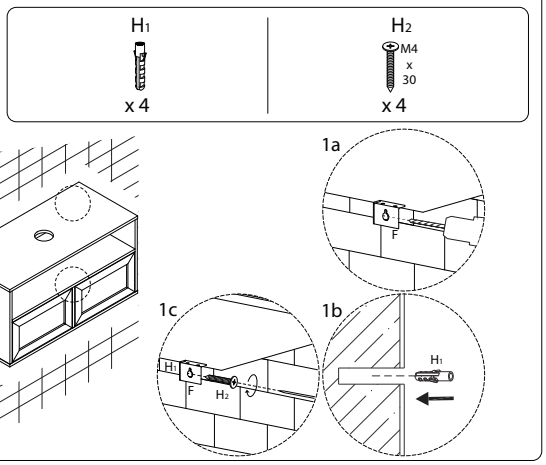

!

