BENDIGO

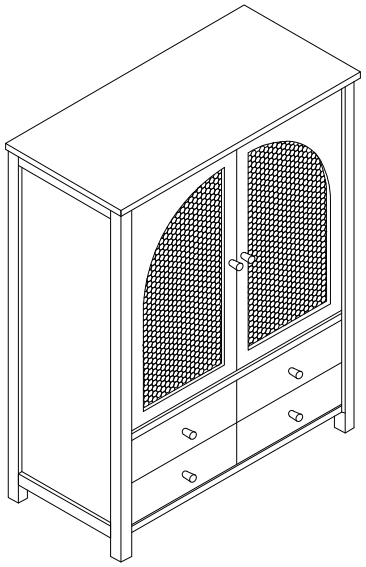

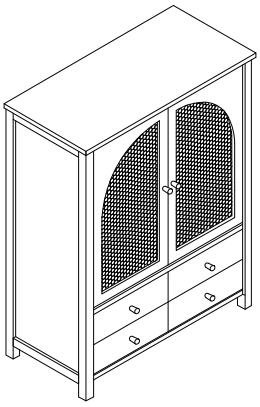

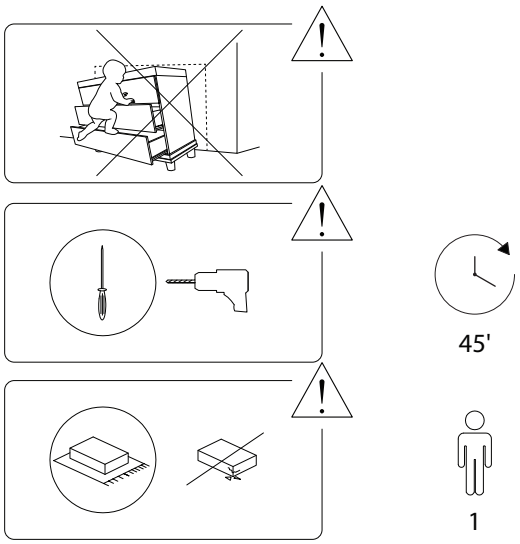
45'
1

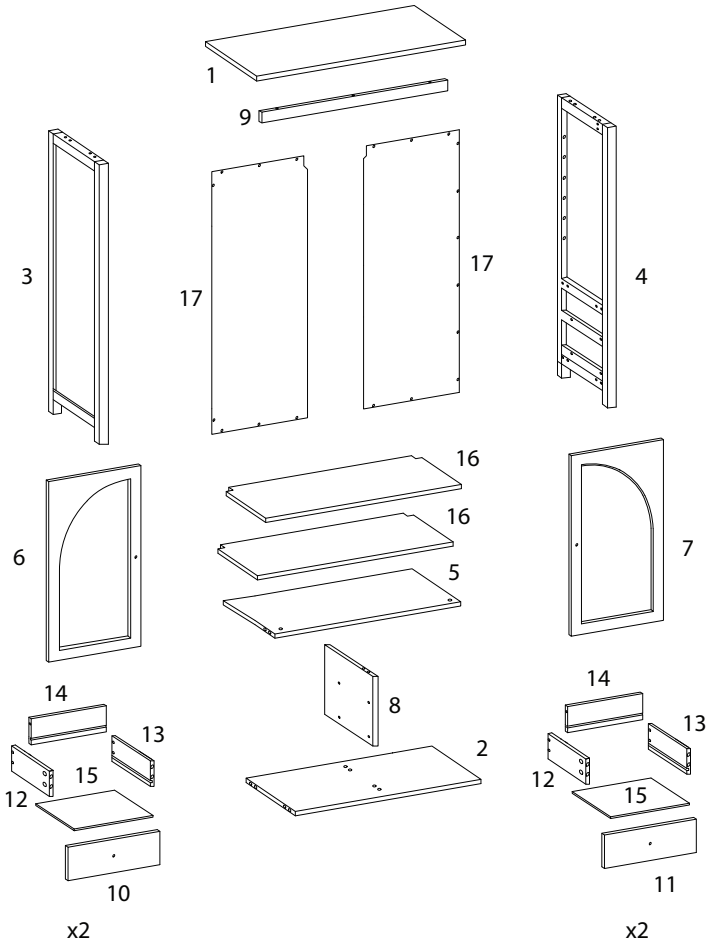
1
9
3
17
17
4
16
16
5
6
7
8
14
13
15
12
10
x2
2
14
13
12
15
11
x2

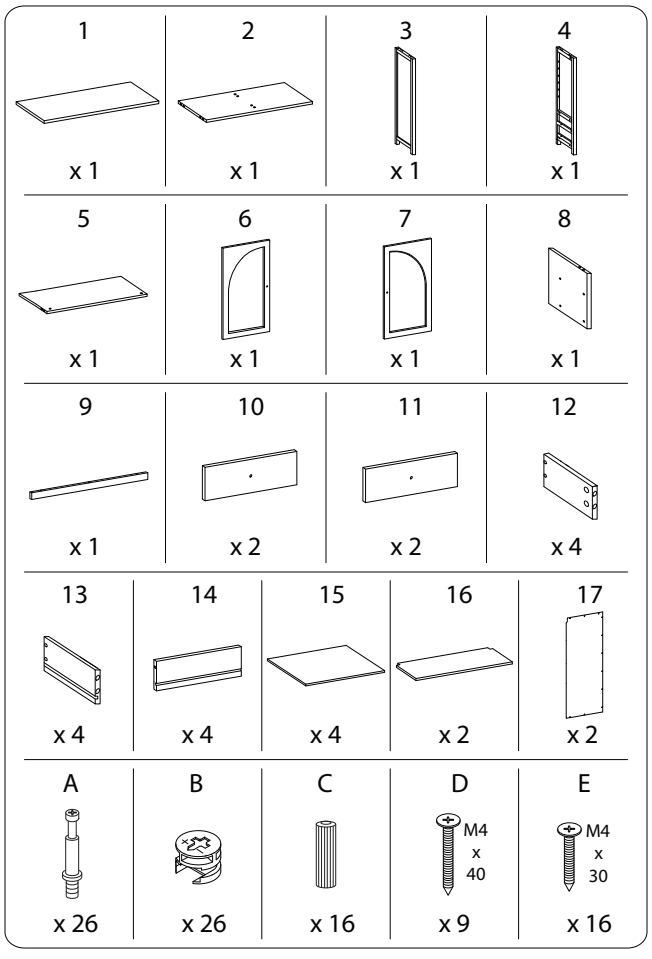
1
x 1
2
x 1
3
x 1
4
x 1
5
x 1
6
x 1
7
x 1
8
x 1
9
x 1
10
x 2
11
x 2
12
x 4
13
x 4
14
x 4
15
x 4
16
x 2
17
x 2
A
x 26
B
x 26
C
x 16
D
M4
x
40
x 9
E
M4
x
30
x 16

F1	F2	G1	G2	H1
	 M3 x 16		 M3 x 10	
x 1	x 2	x 2	x 1	x 2
H2	**J**	**K**	**L**	**M**
	 M3 x 12		 M4 x 18	
x 2	x 16	x 6	x 6	x 4
N	**O**	**P**	**Q**	**R**
	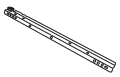	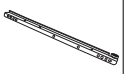	 M4 x 12	
x 4	x 4	x 4	x 32	x 2
S	**T**	**U**	**V**	**W**
 M2.5 x 10			 M4 x 40	
x 28	x 8	x 1	x 1	x 1
X	**Y**	**Z**	**a**	
 M4 x 12				
x 1	x 1	x 4	x 4	

1

9	J	R
	 M3 x 12	
x 1	x 4	x 2

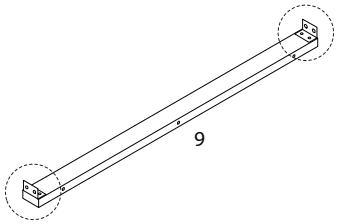

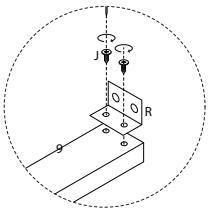

2

1	F1	F2	W	X
		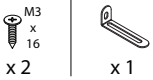 M3 x 16		 M4 x 12
x 1	x 1	x 2	x 1	x 1

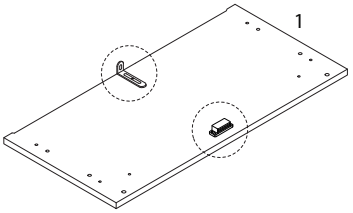

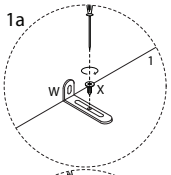

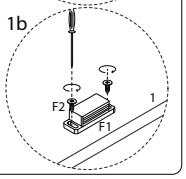

3

6	7	G1	G2	K	L
			M3 x 10		M4 x 18
x 1	x 1	x 2	x 2	x 2	x 2

4

3	4	A	M	N	Q
					M4 x 12
x 1	x 1	x 8	x 2	x 2	x 8

5

8 x 1 | N x 2 | M x 2 | Q M4 x 12 x 8

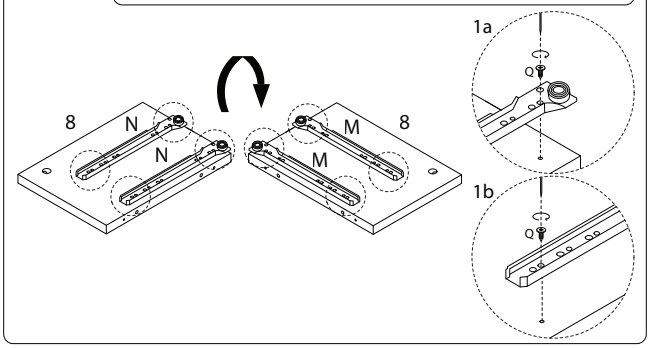

6

C x 4

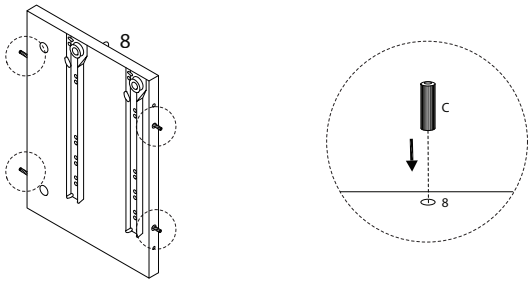

7

5 x 1 | A x 2

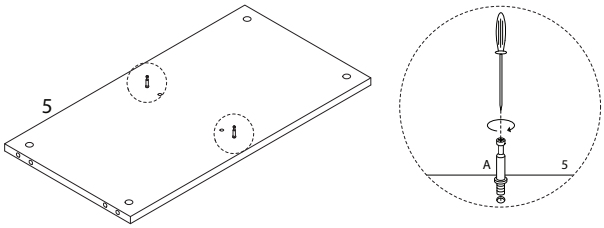

8

B x 2

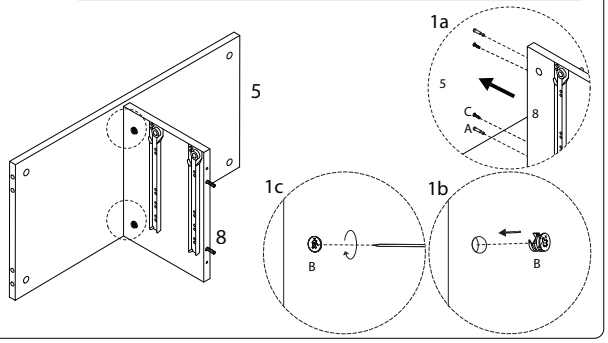

9

2 x 1 | D M4 x 40 x 2

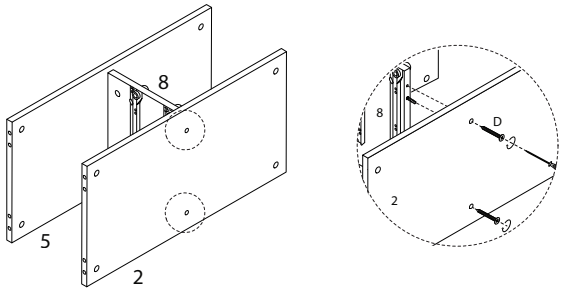

11

B x 4

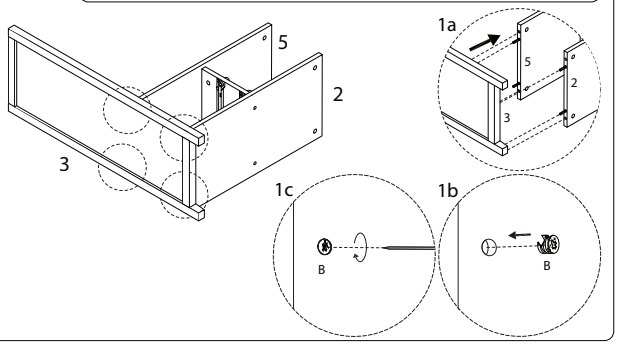

10

C x 8

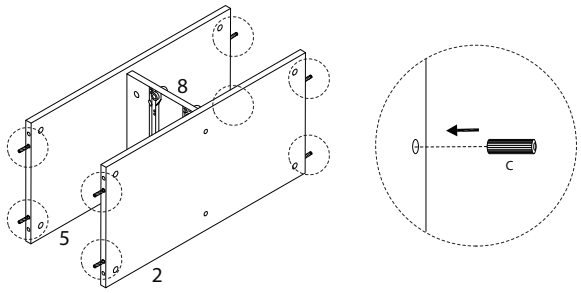

12

B x 4

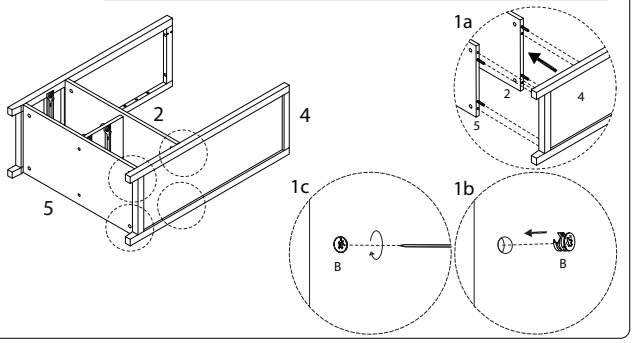

13

J

M3 x 12

x 4

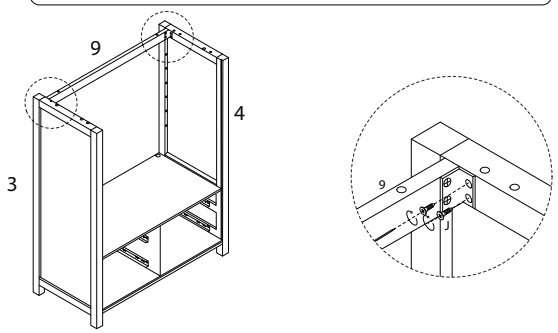

14

C

x 4

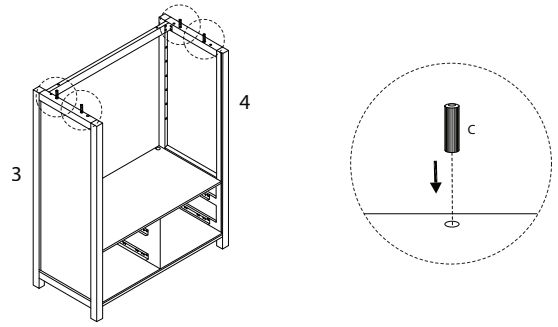

15

D

M4 x 40

x 7

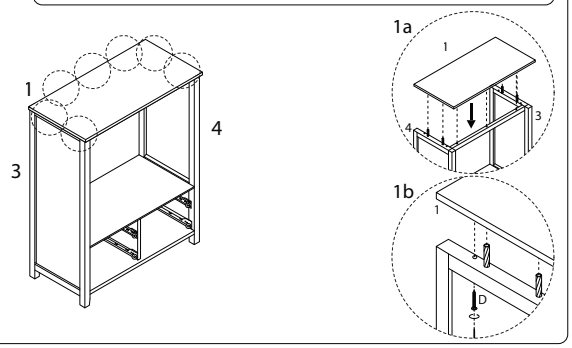

16

Z

x 4

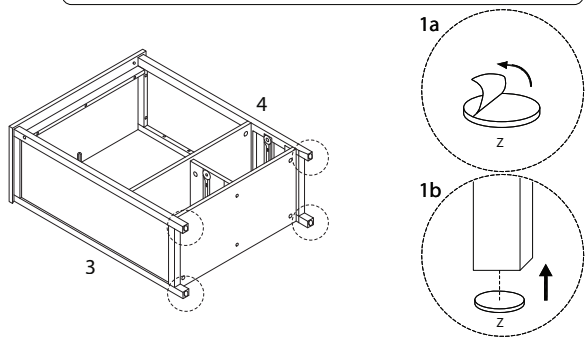

17

17	S	Y
x 2	M2.5 x 10 x 28	x 1

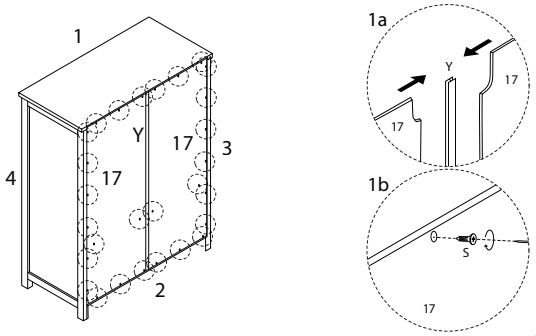

18

H1	H2	a
x 2	x 2	x 4

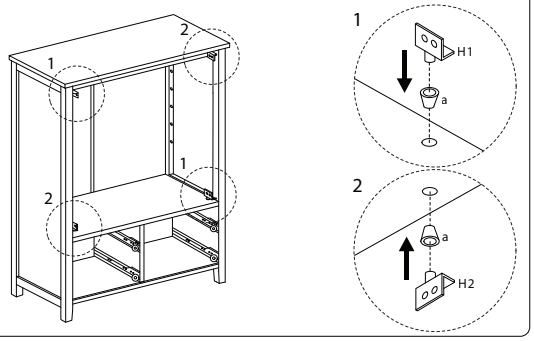

19

J

M3 x 12

x 8

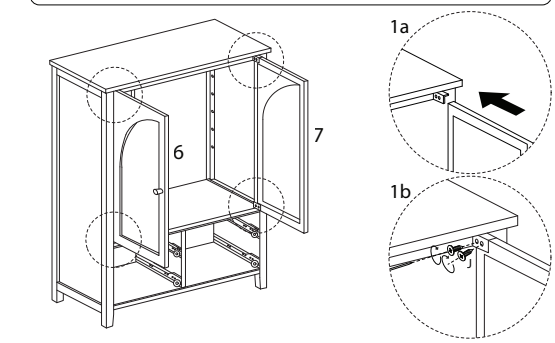

20

U	V
x 1	M4 x 40 x 1

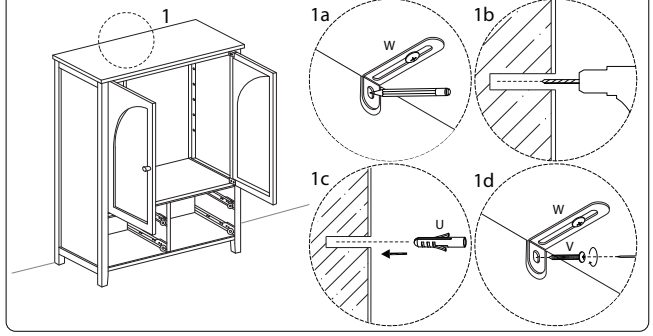

21

T

x 8

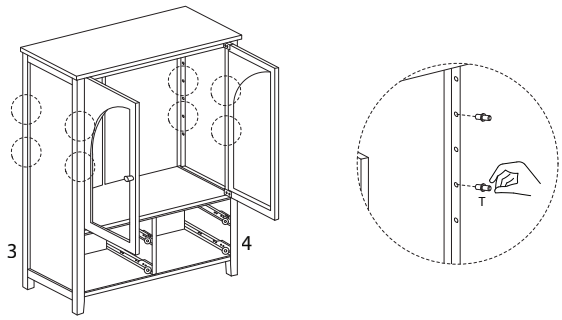

22

16

x 2

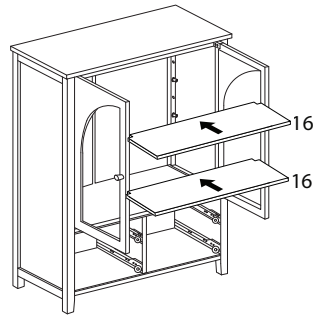

23 x 4

12	13	14	E
x 1	x 1	x 1	x 4

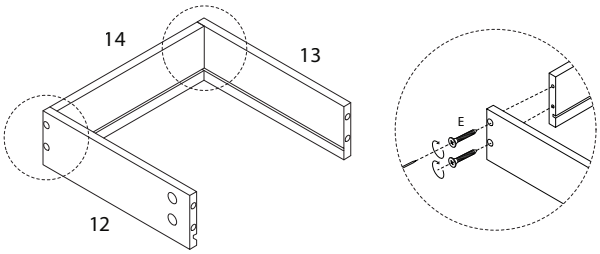

24 x 4

15

x 1

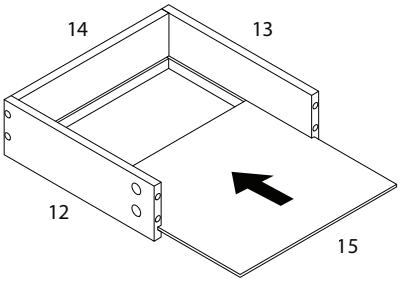

25 x 2

10	11	A	K	L
x 1	x 1	x 8	x 2	x 2

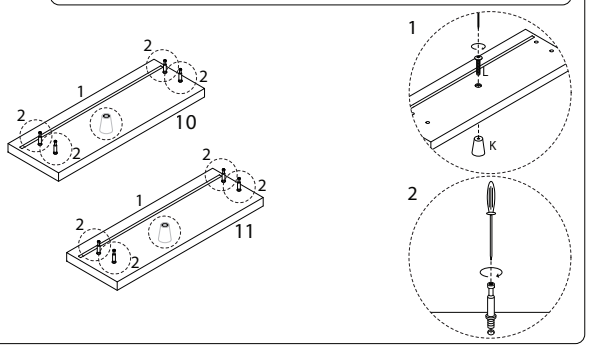

26 x 2

B

x 8

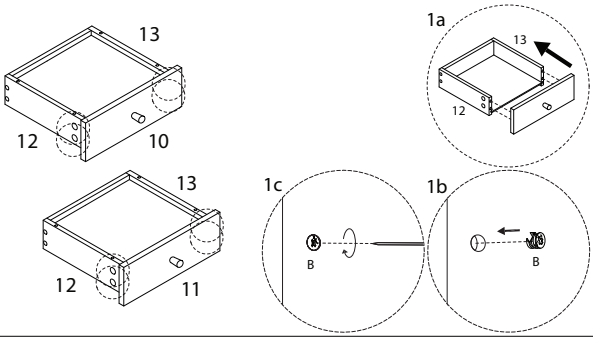

27 x 2

O	P	Q
x 2	x 2	x 8

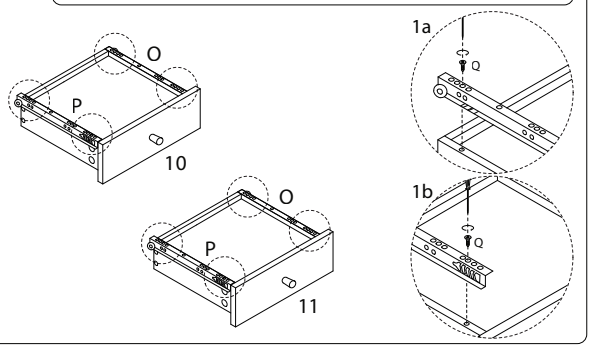

28

