EDLAND

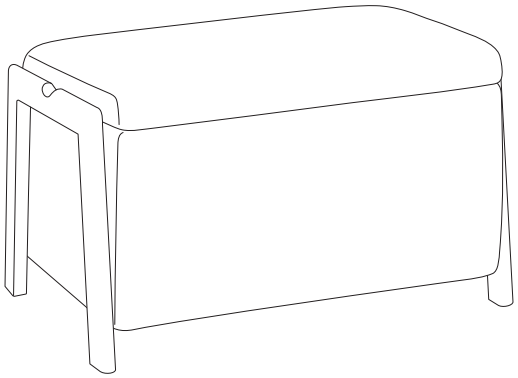

1/5

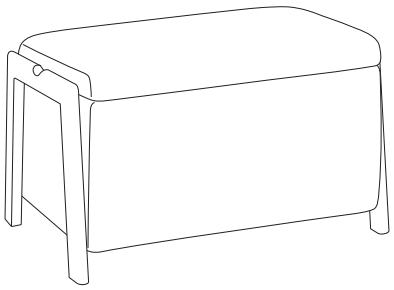

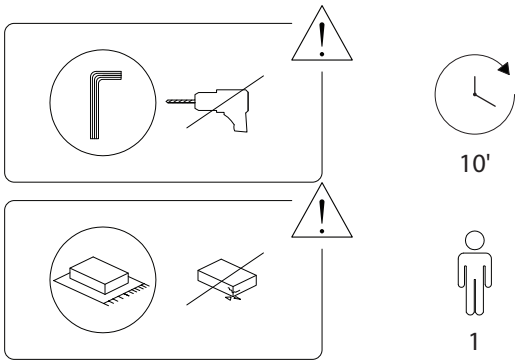

2/5

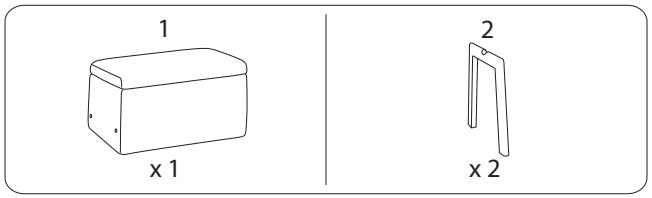

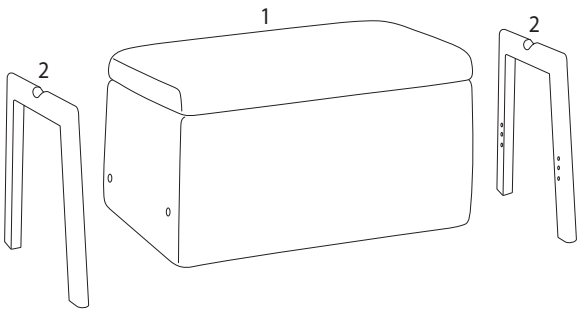

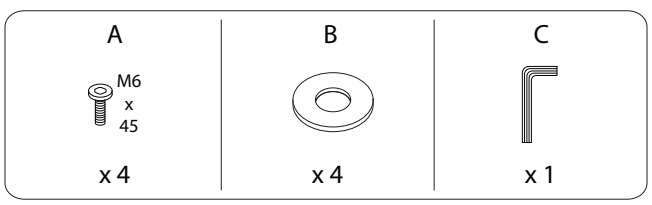

3/5

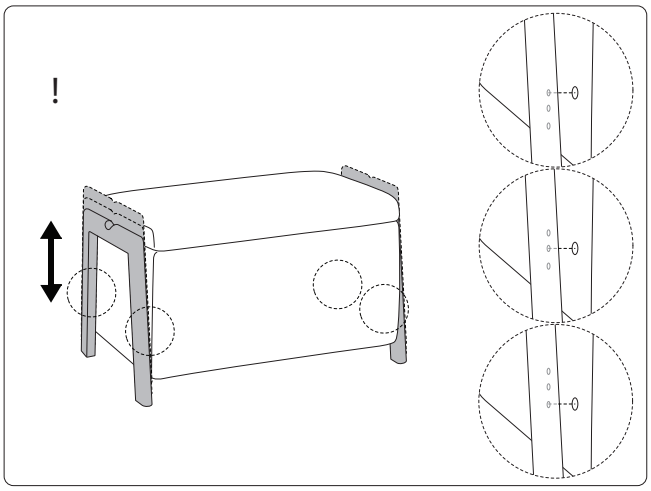

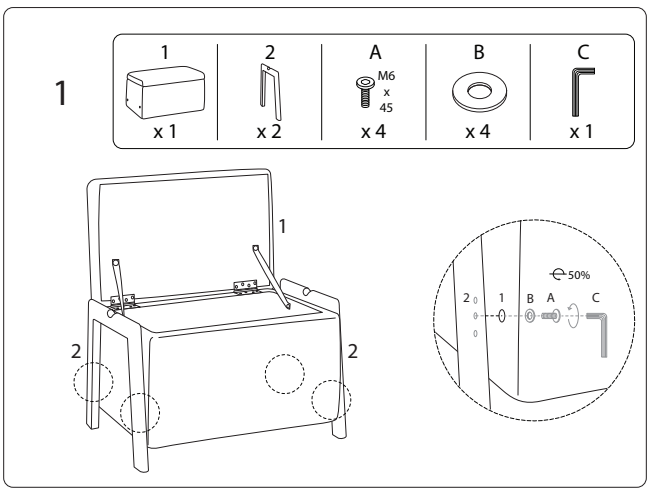

4/5

2

C

x 1

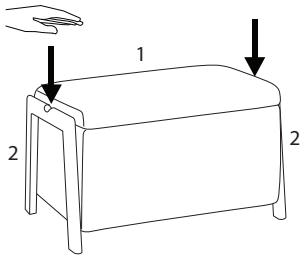

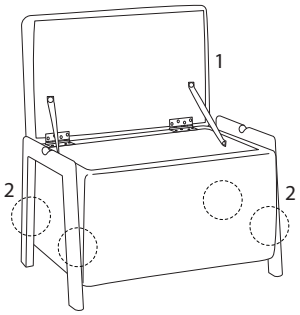

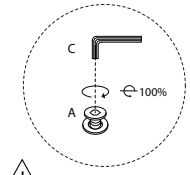

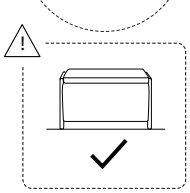

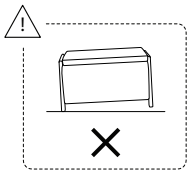

1500/EDLAND/230326/