ABERDEEN

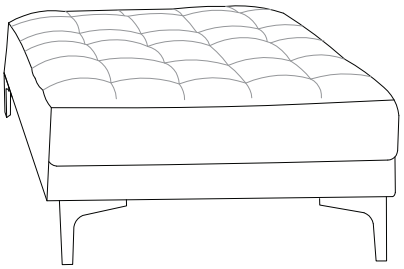

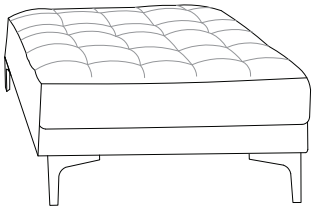

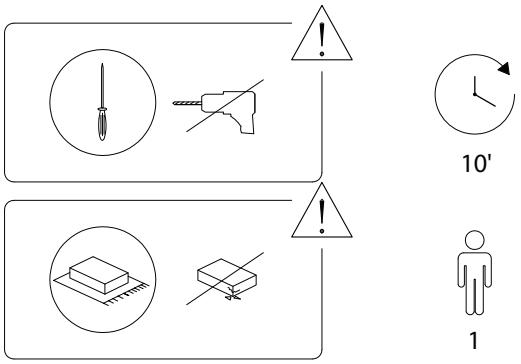

1/3

A	B	C
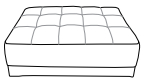		 M4 x 30
x 1	x 4	x 16

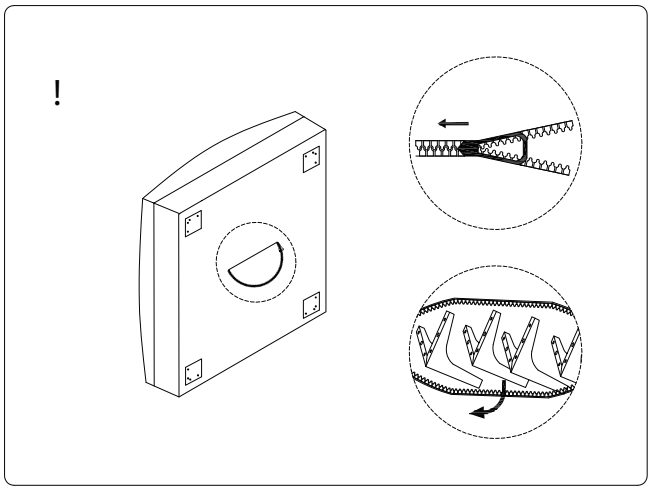

A

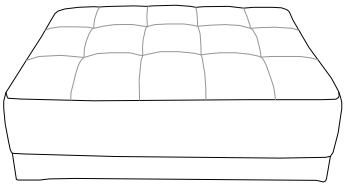



B x 4

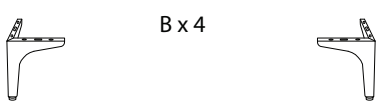

2/3

1

A	B	C
		 M4 x 30
x 1	x 4	x 16

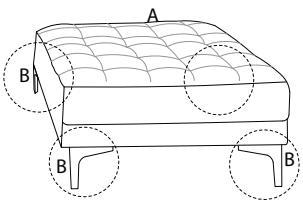

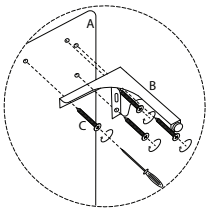

3/3