ALBIA

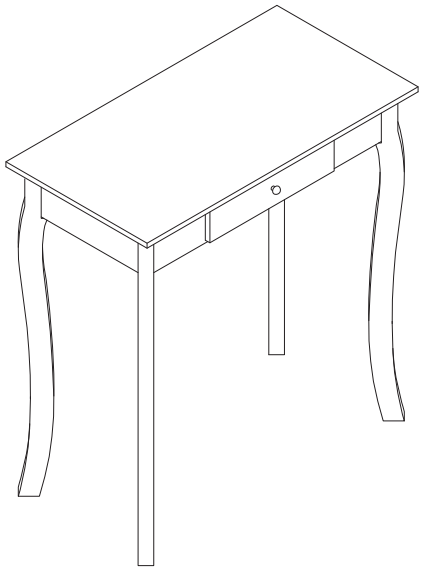

1/9

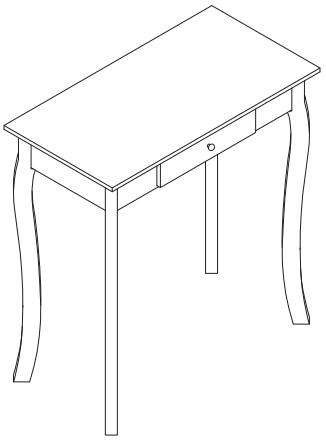

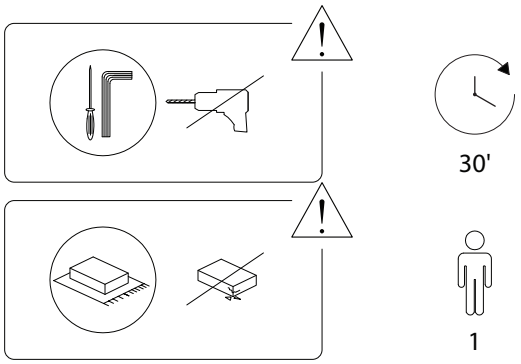

2/9

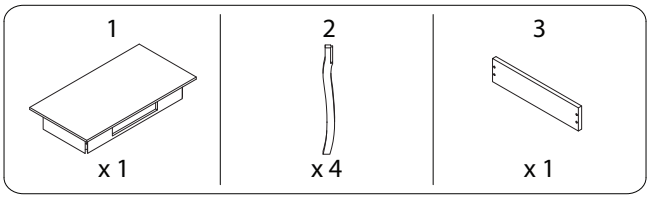

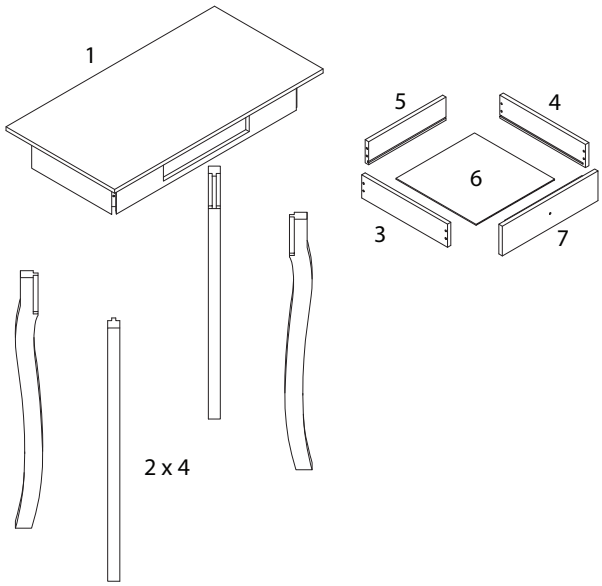

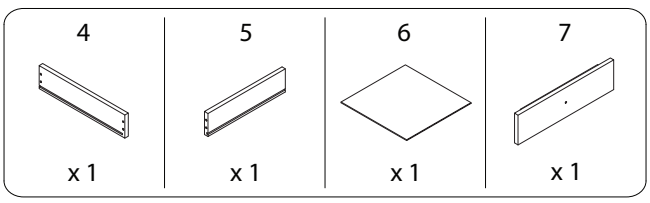

3/9

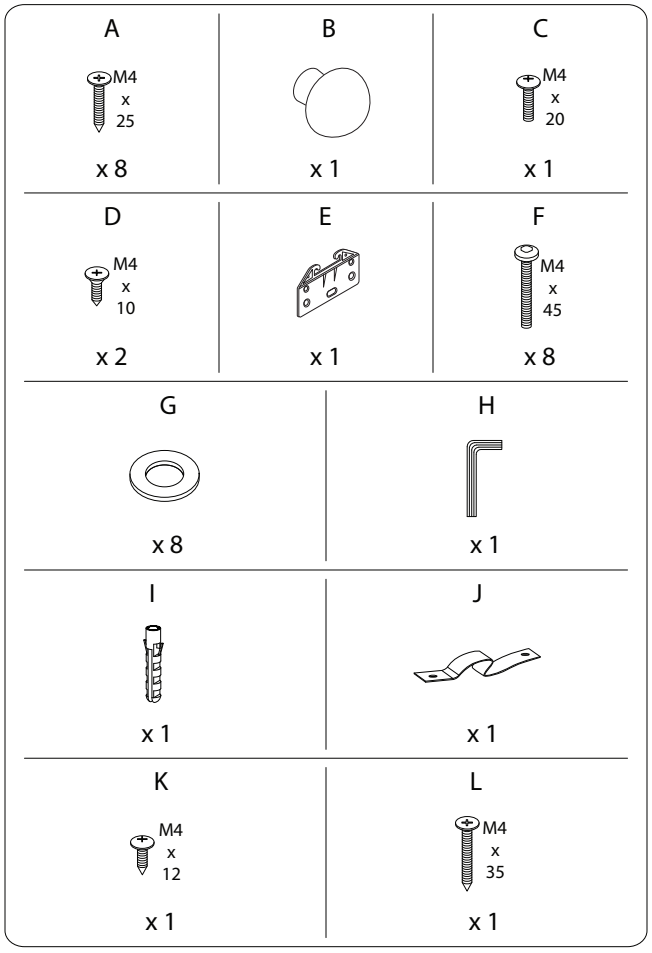

4/9

1

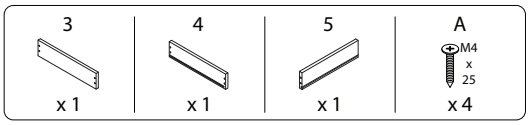
3
x 1
4
x 1
5
x 1
A
M4
x
25
x 4

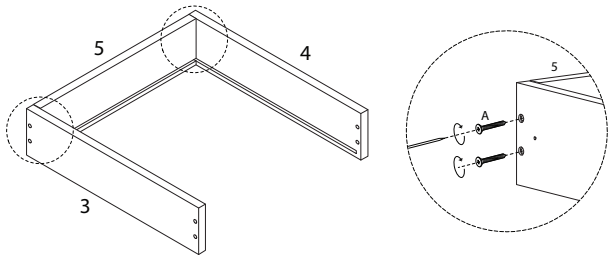
5
4
3
5
A

2

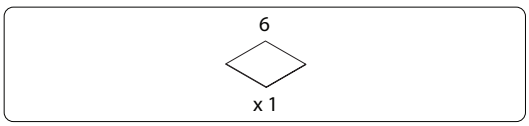
6
x 1

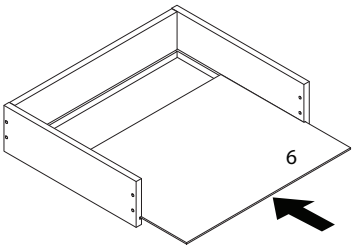
6

3

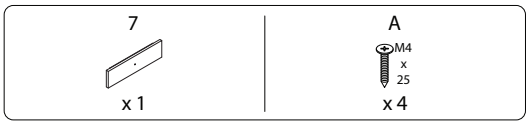
7
x 1
A
M4
x
25
x 4

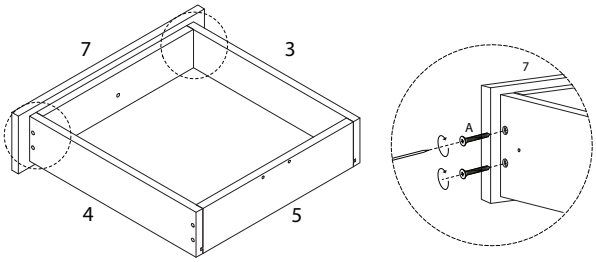
7
3
4
5
7
A

4

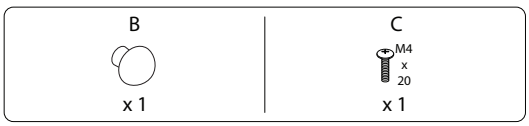
B
x 1
C
M4
x
20
x 1

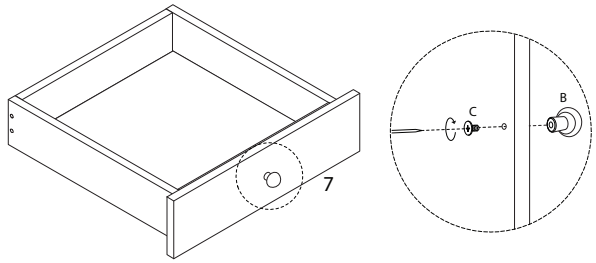
7
C
B

5

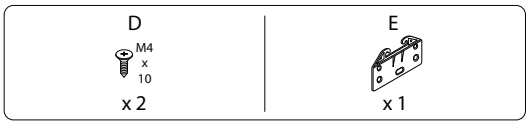
D
M4
x
10
x 2
E
x 1

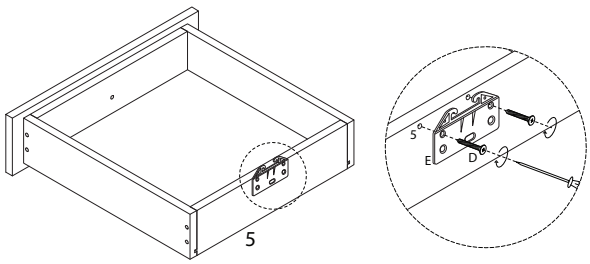
5
5
E
D

6

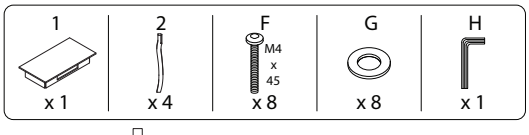
1
x 1
2
x 4
F
M4
x
45
x 8
G
x 8
H
x 1

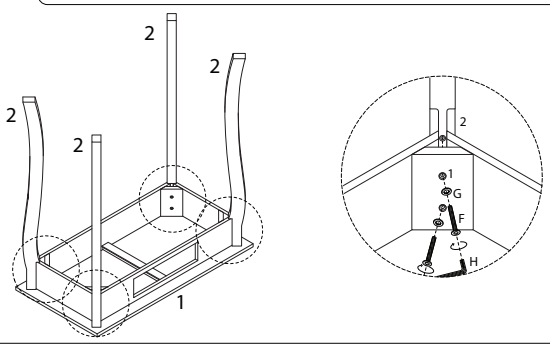
2
2
2
2
1
2
1
G
F
H

7

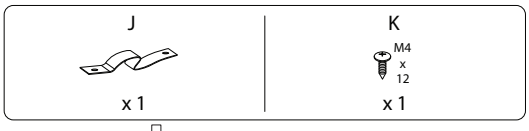
J
x 1
K
M4
x
12
x 1

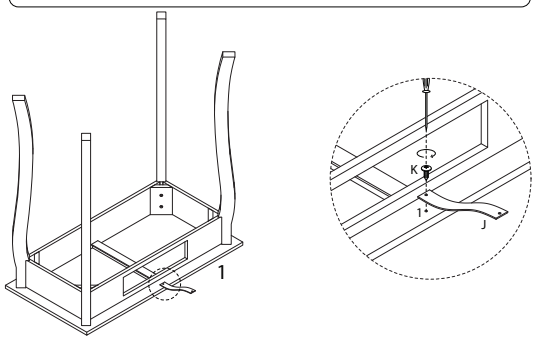
1
K
1
J

8

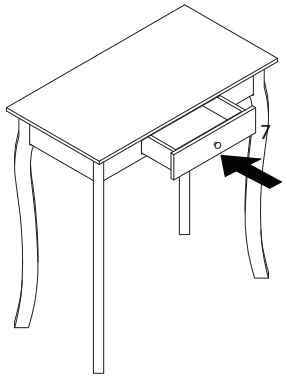
7

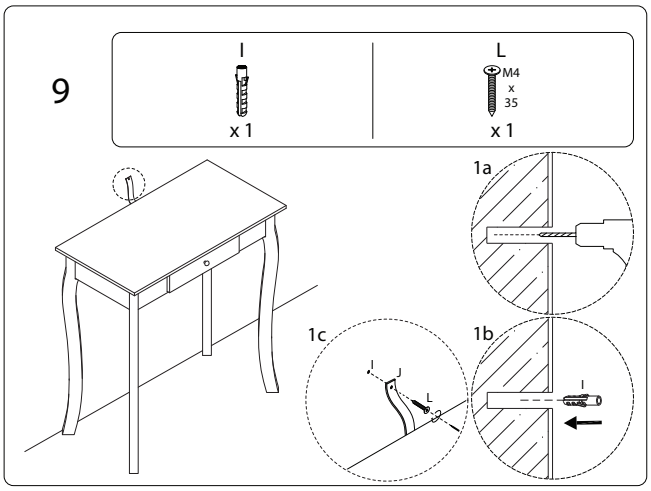

1273/ALBIA/270426/