LUCASTON



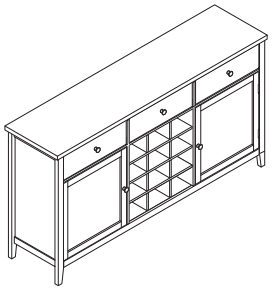

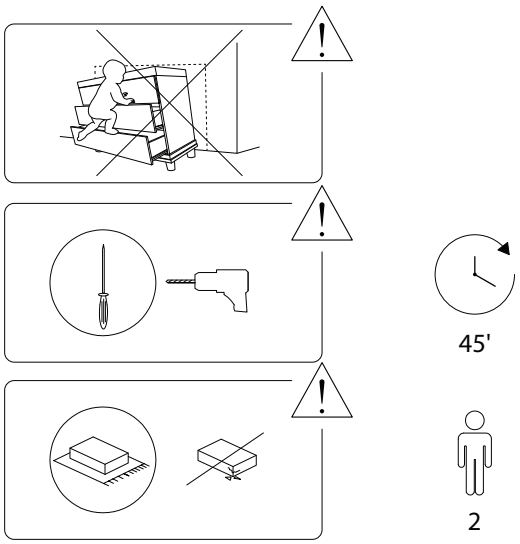

1444/LUCASTON/110925/

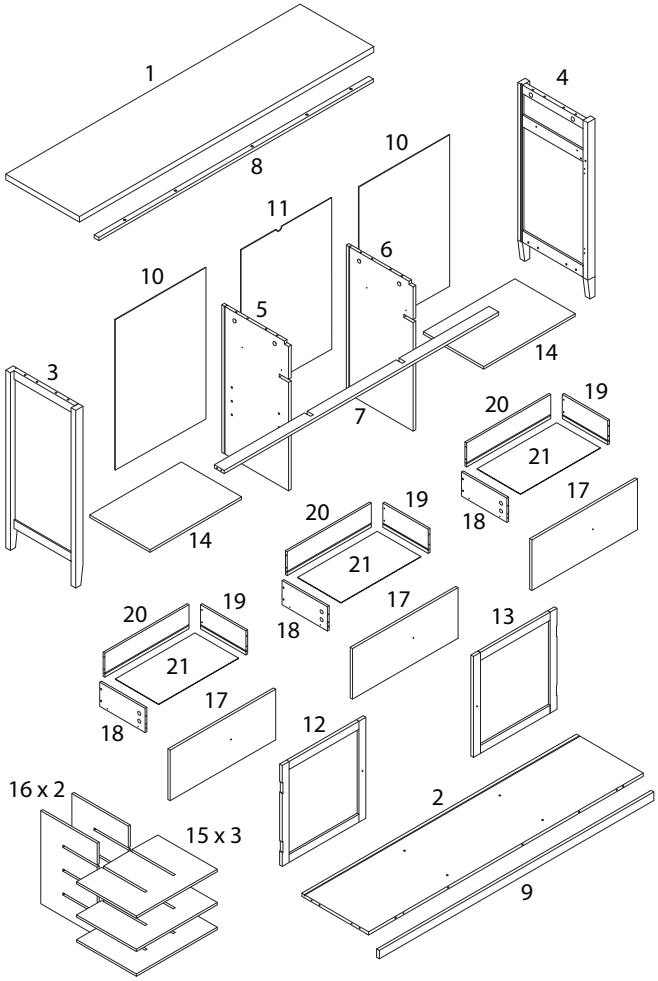

1444/LUCASTON/110925/

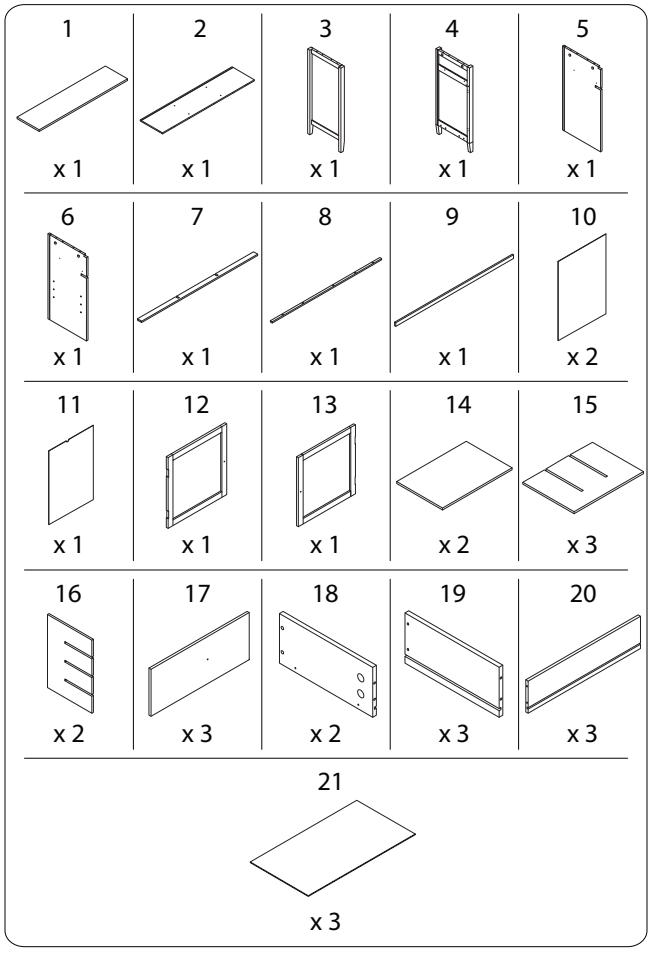

1444/LUCASTON/110925/

A	B	C	D	E
M6 x 35			M4 x 40	M3 x 12
x 31	x 31	x 20	x 4	x 42
F	**G**	**H**	**I**	**J**
		M3.5 x 14		M4 x 12
x 4	x 2	x 4	x 1	x 1
K	**M**	**N**	**O**	**P**
			M4 x 16	M4 x 16
x 2	x 8	x 5	x 2	x 3
Q	**R**	**SCL**	**SCR**	**SDL**
	M2.5 x 14			
x 12	x 12	x 3	x 3	x 3
SDR	**T**	**U**	**V**	**W**
			M4 x 25	M4 x 30
x 3	x 2	x 2	x 5	x 12

1

6	E	SCL	SCR
x 1	M3 x 12 x 4	x 1	x 1

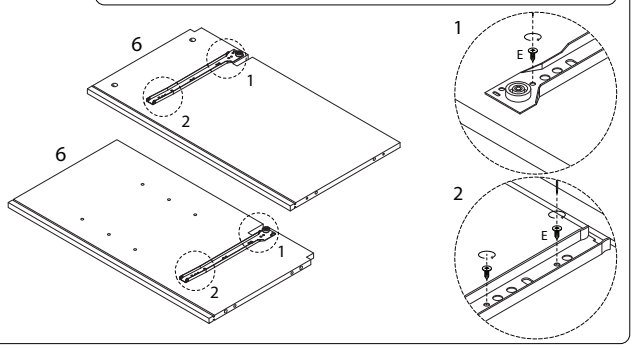

2

5	E	SCL	SCR
x 1	M3 x 12 x 4	x 1	x 1

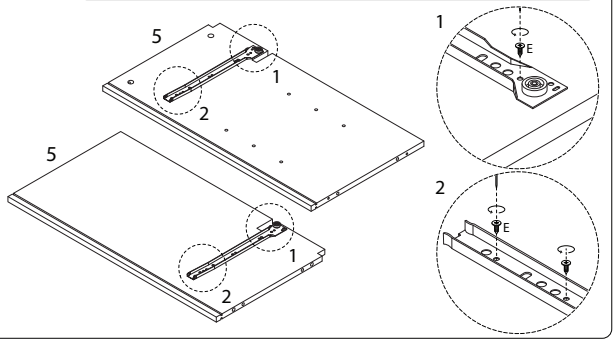

3

4	E	SCR
x 1	M3 x 12 x 2	x 1

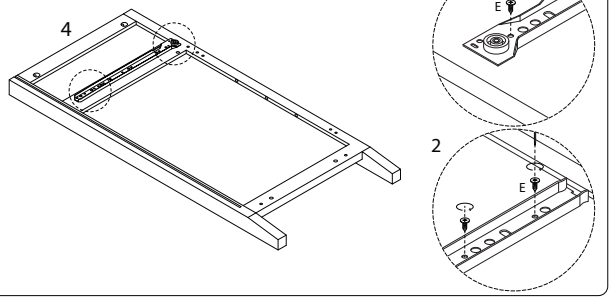

5

7	G	H
x 1	x 2	M3.5 x 14 x 4

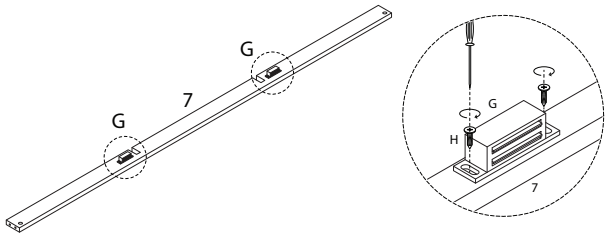

4

3	E	SCL
x 1	M3 x 12 x 2	x 1

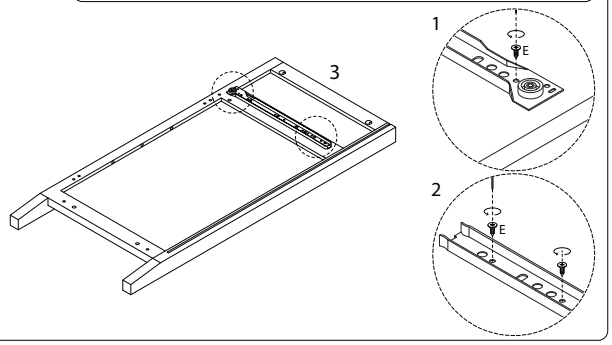

6

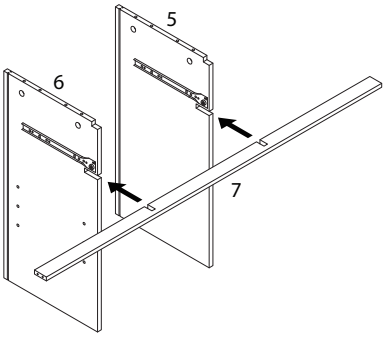

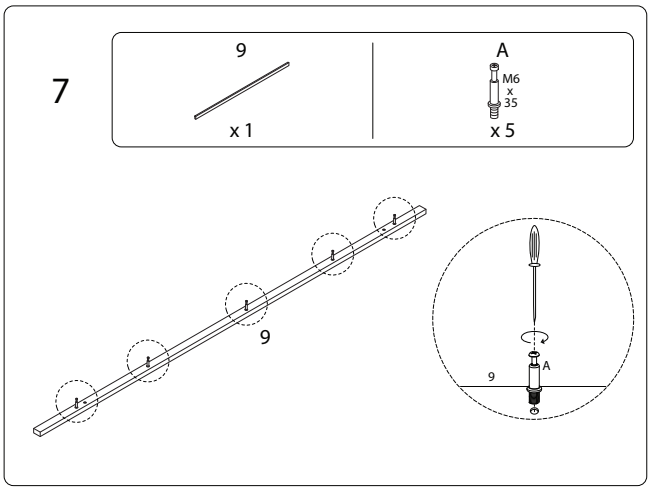
7
9
x 1
A
M6
x
35
x 5
9
9
A

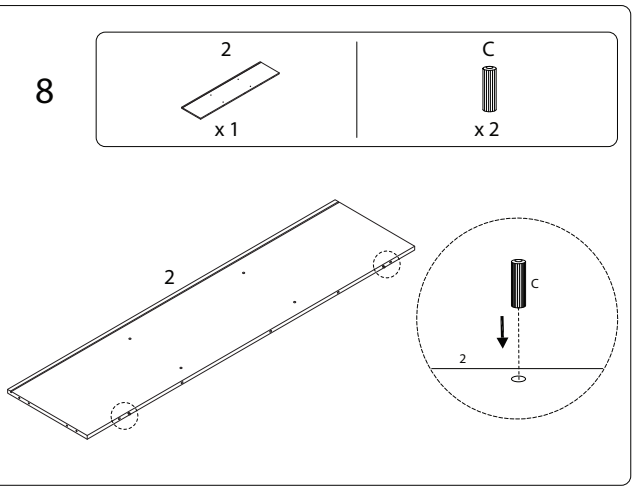
8
2
x 1
C
x 2
2
C
2

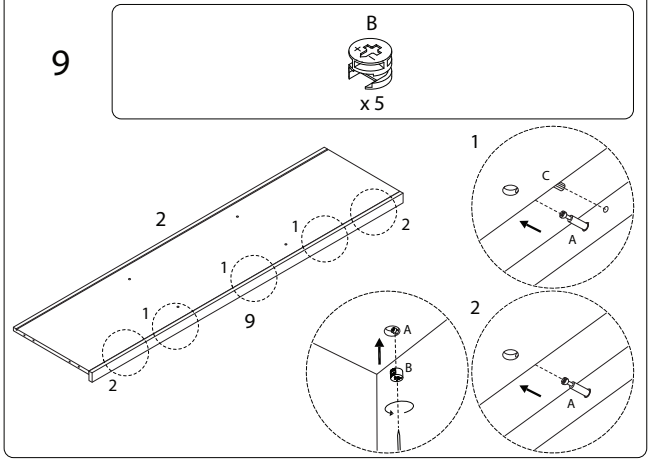
9
B
x 5
2
1
2
1
1
9
2
1
C
A
2
A
B
A

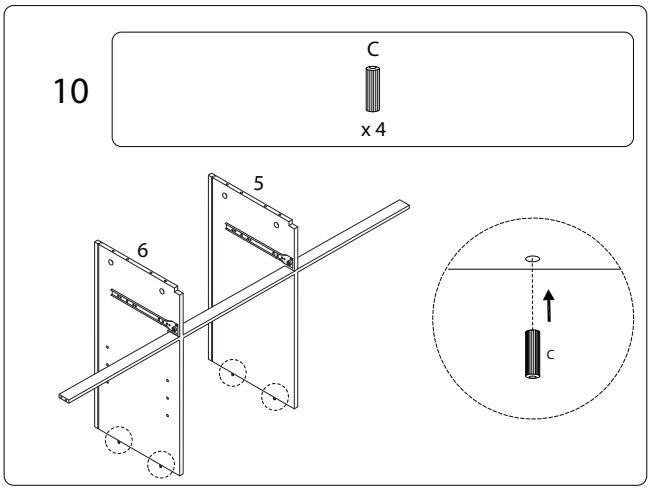
10
C
x 4
5
6
C

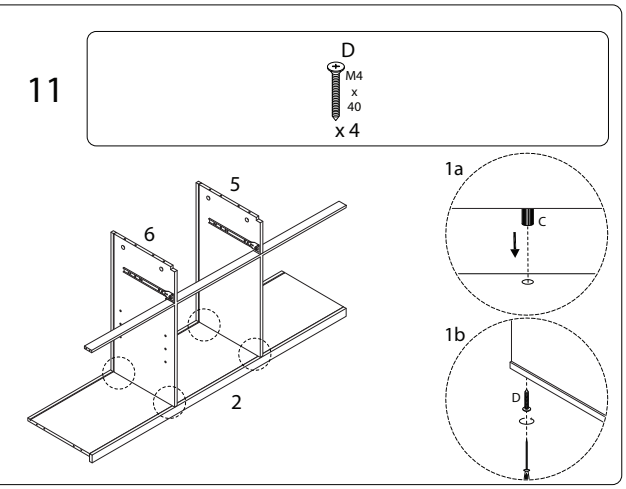
11
D
M4
x
40
x 4
5
6
2
1a
C
1b
D

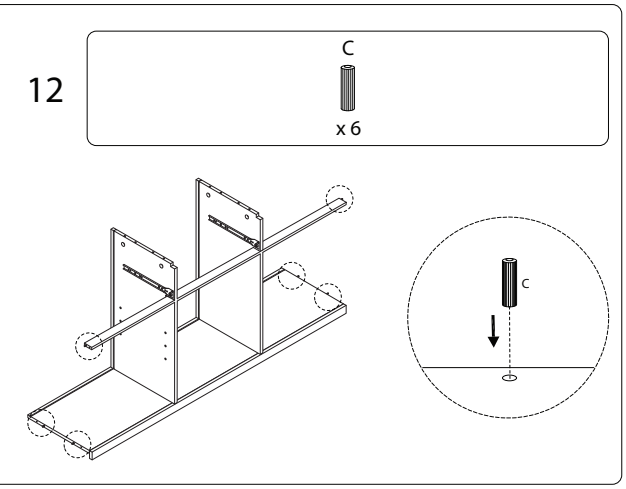
12
C
x 6
C

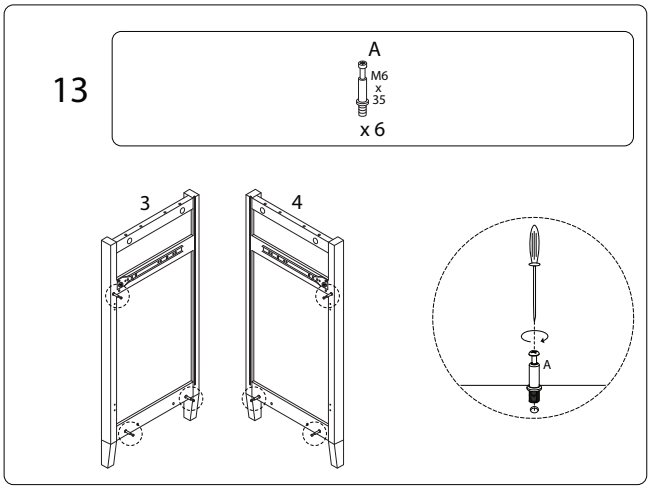
13
A
M6
x
35
x 6
3
4
A

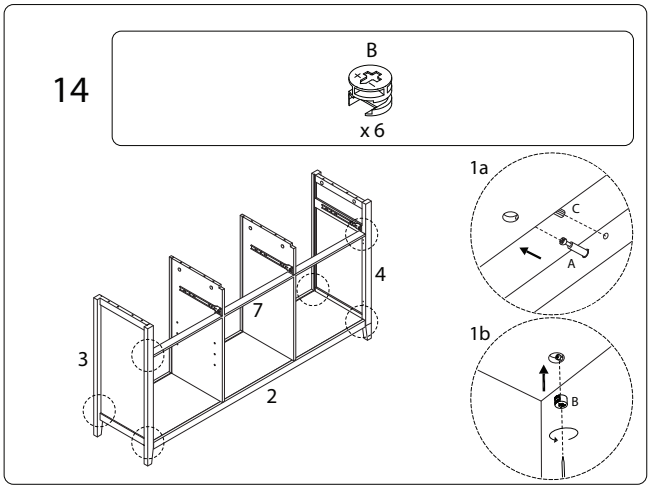
14
B
x 6
4
7
3
2
1a
C
A
1b
B

15

T x 2

U x 2

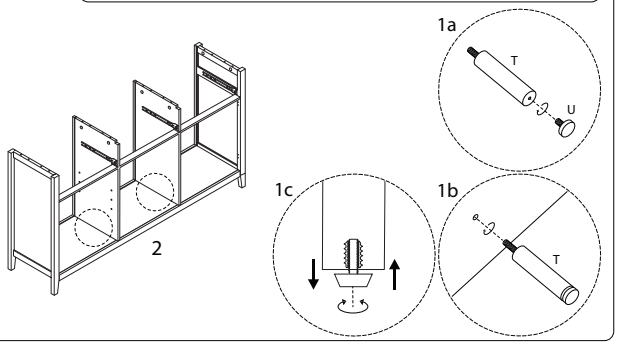

16

10 x 2

11 x 1

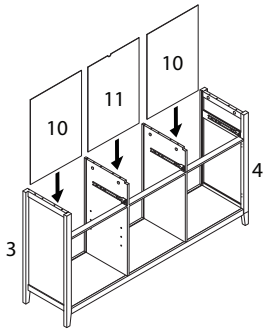

17

1 x 1

8 x 1

V M4 x 25 x 5

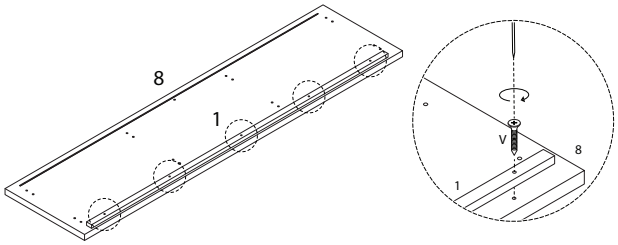

18

I x 1

J M4 x 12 x 1

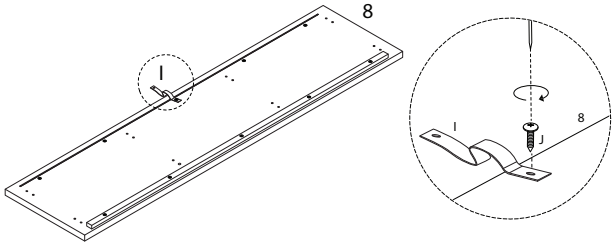

19

A M6 x 35 x 8

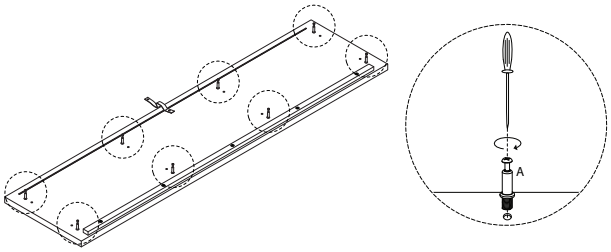

20

C x 8

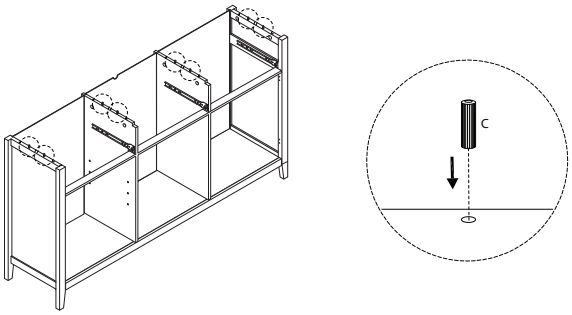

21

B x 8

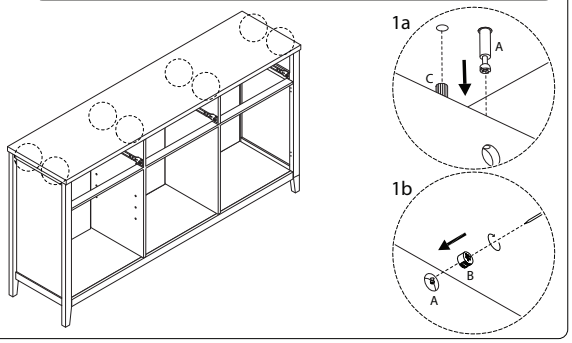

22

M x 8

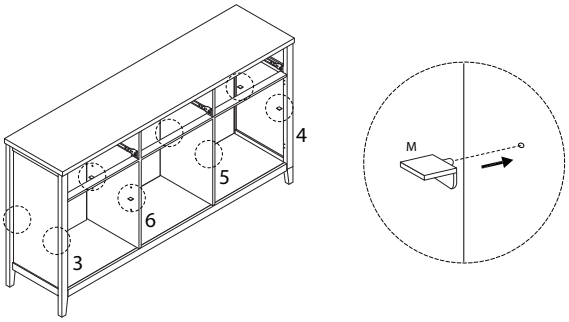

23

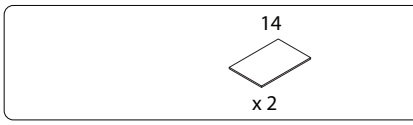

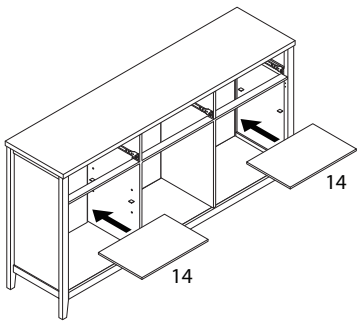

24

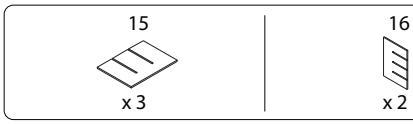

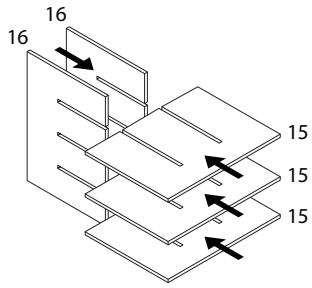

25

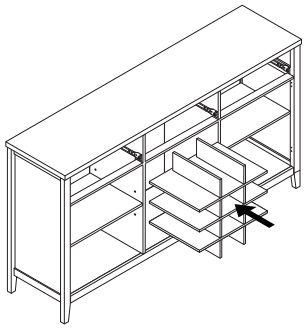

26

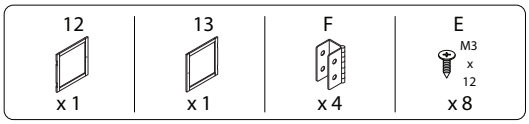

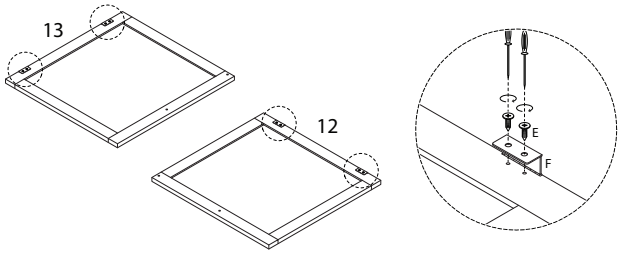

27

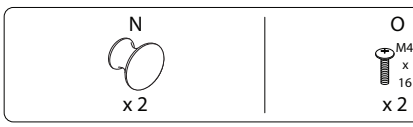

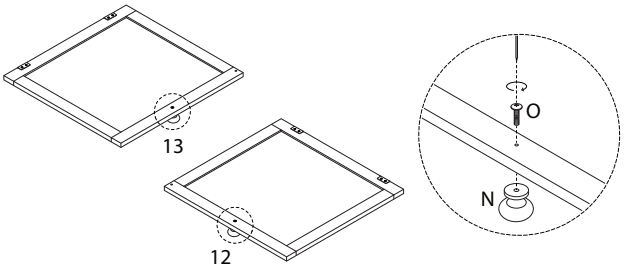

29

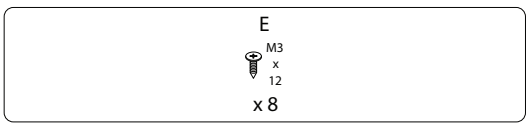

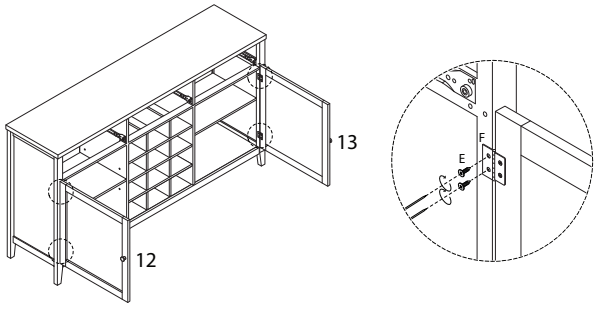

28

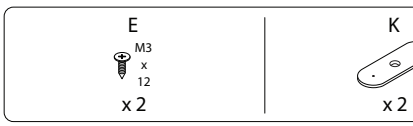

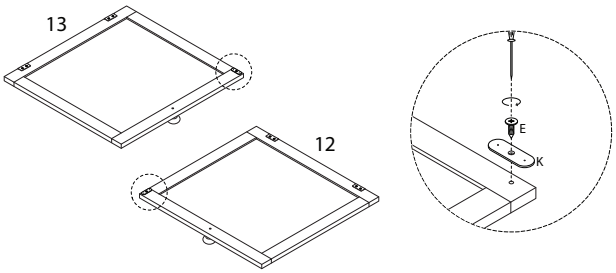

30

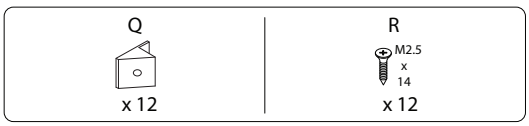

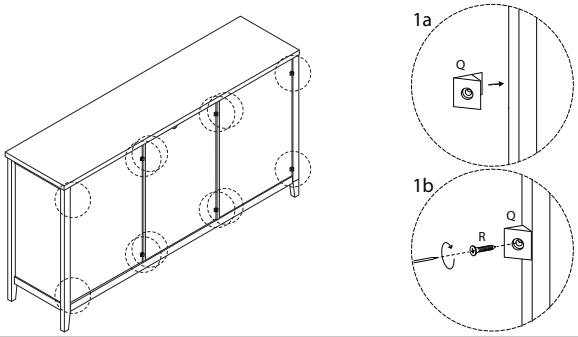

31 x 3

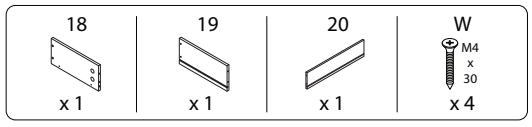

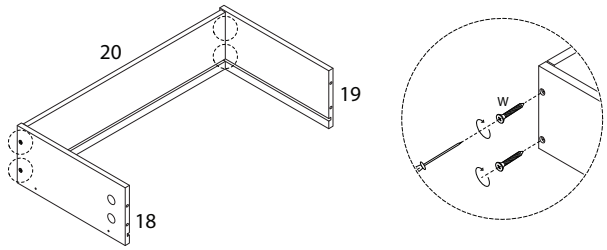

32 x 3

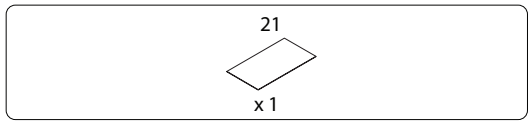

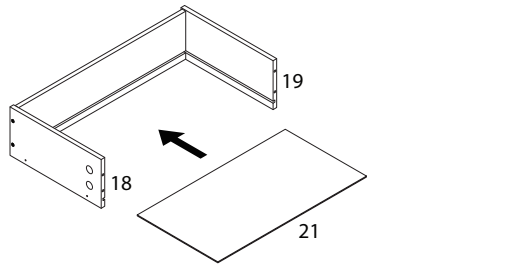

33 x 3

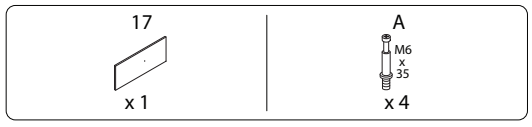

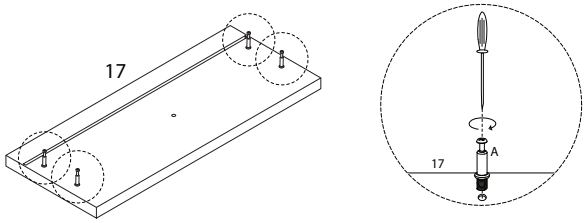

34 x 3

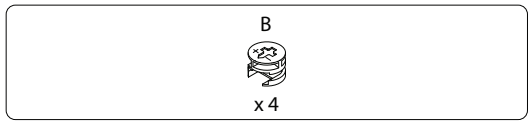

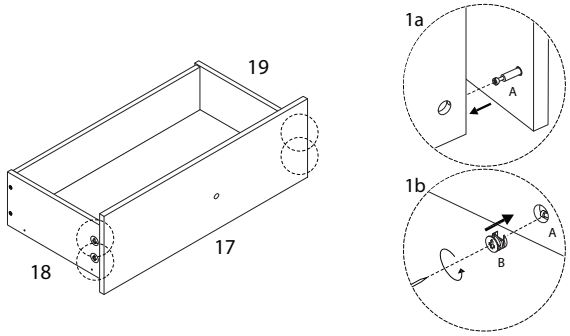

35 x 3



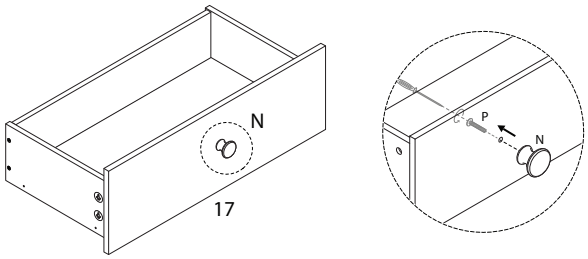

37

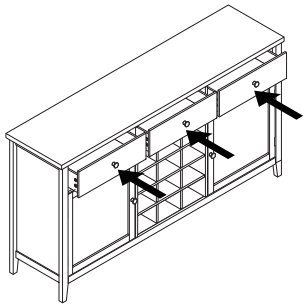

36 x 3

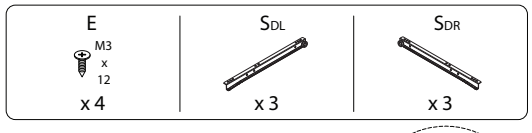

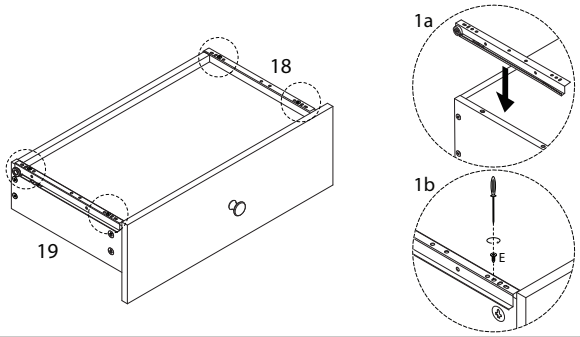

38

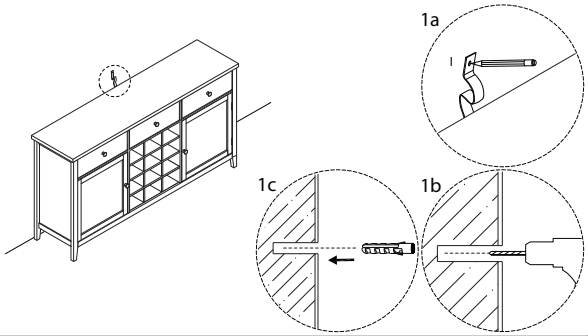

39

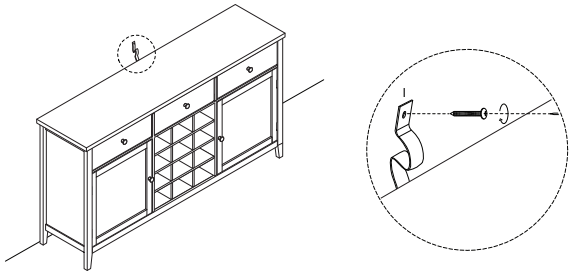

1444/LUCASTON/110925/