# ILBRO

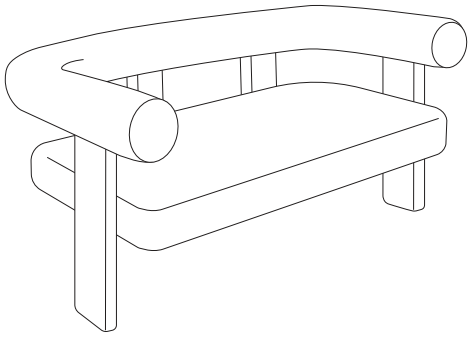

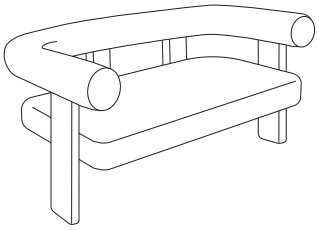

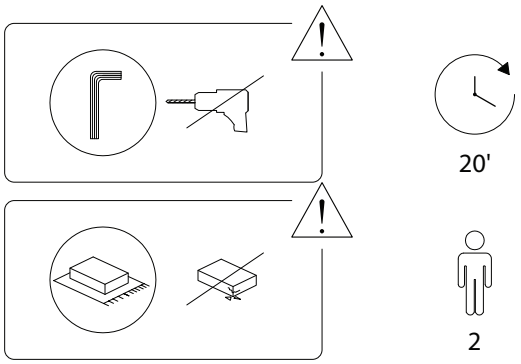


1/4

2533/ILBRO/280325/

| A | B | C | D | E | F |
|---|---|---|---|---|---|
| x 1 | x 1 | x 2 | x 1 | x 1 | x 4 |

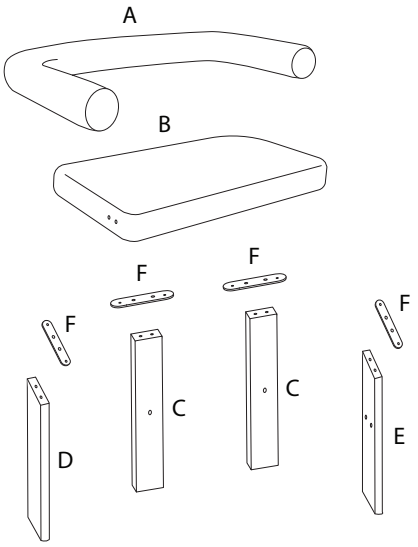


| G | H | I | J | K | L |
|---|---|---|---|---|---|
| M6 x 20 | M6 x 25 | M8 x 40 | | | |
| x 8 | x 8 | x 6 | x 6 | x 4 | x 1 |

2/4

2533/ILBRO/280325/

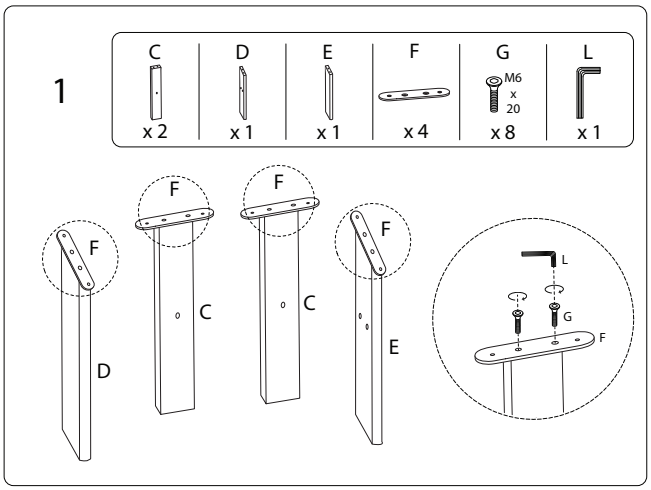


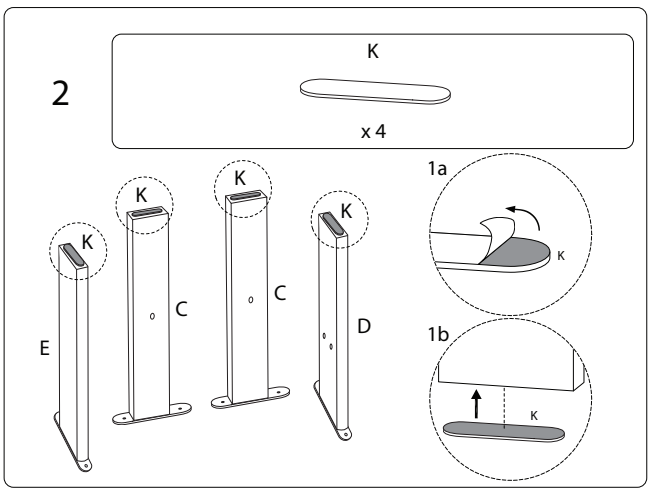


3/4

2533/ILBRO/280325/

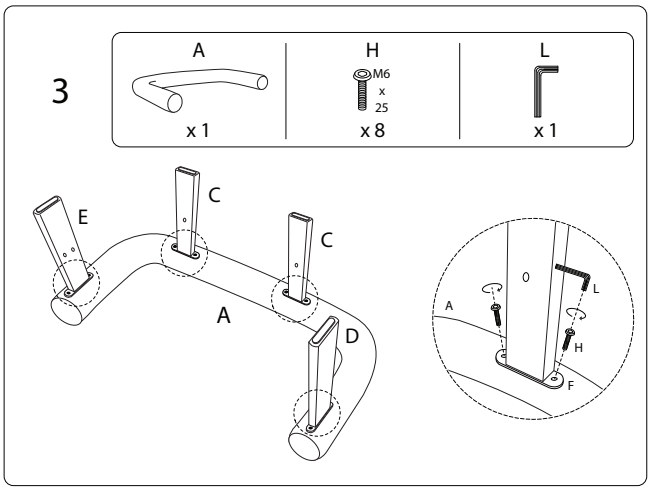


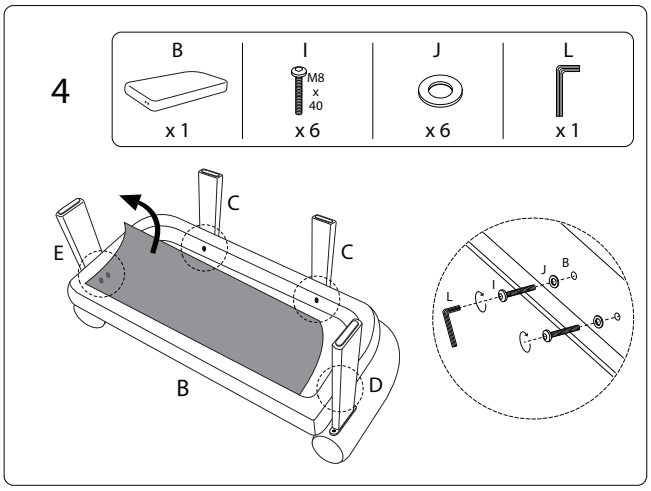




2533/ILBRO/280325/