BLACKPOOL

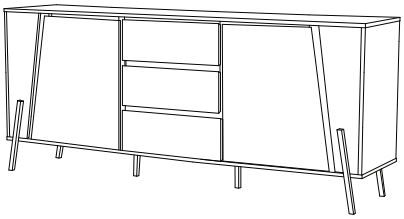

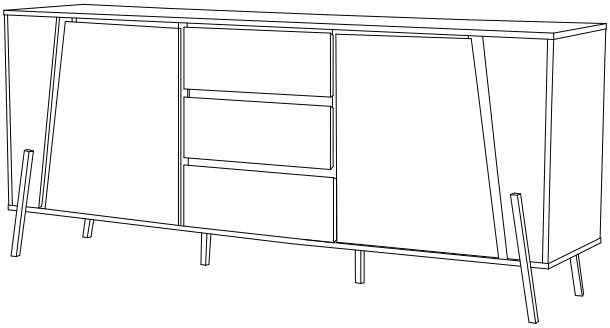

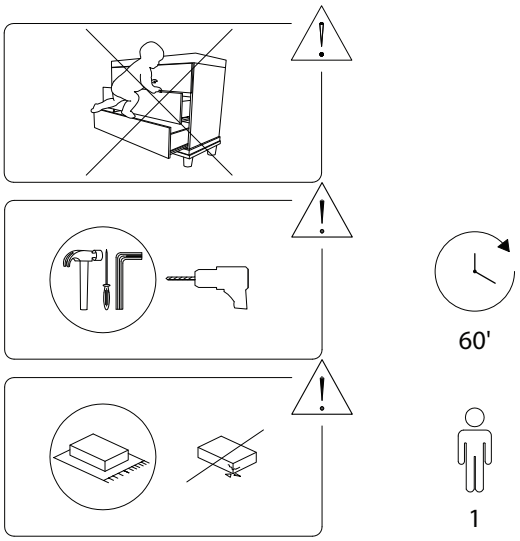

918/BLACKPOOL/110225/

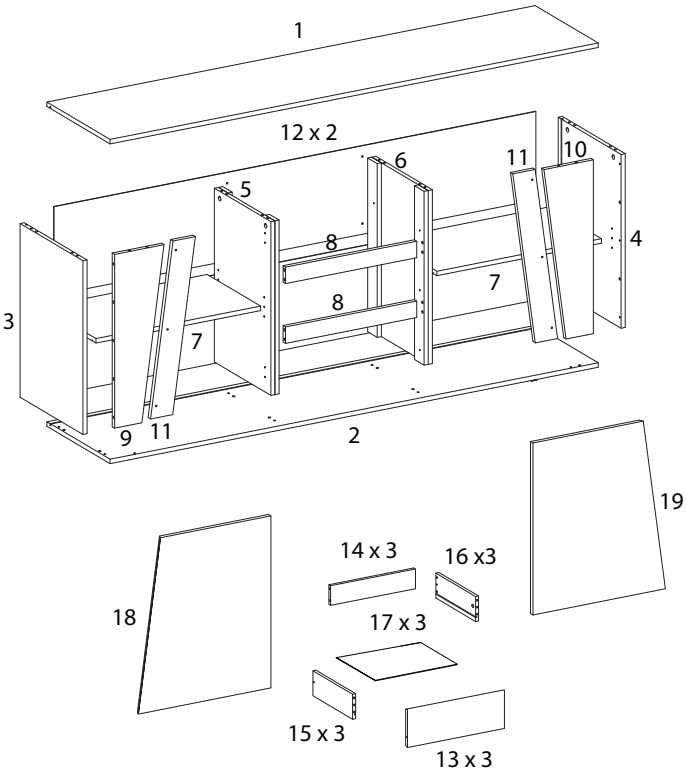

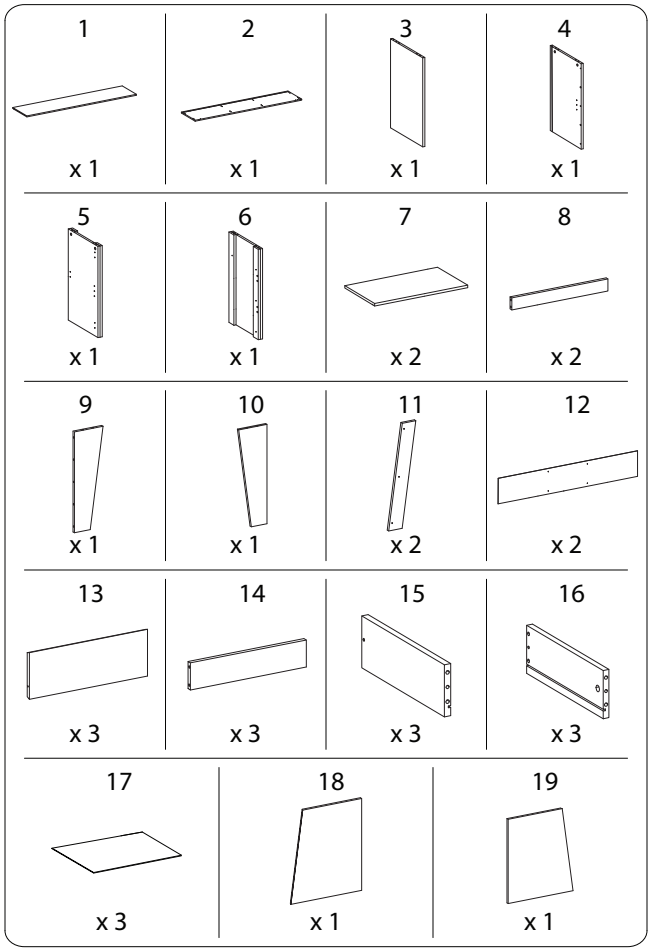

918/BLACKPOOL/110225/

A	B	C
x 22	x 22	x 22
D	**E**	**F**
x 56	M10 x 33,5 x 16	M4 x 10 x 26
G1	**G2**	**H**
x 1	x 1	M6 x 25 x 4
I1	**I2**	**I3**
x 3	x 3	x 3
I4	**J**	**K**
x 3	M6 x 13 x 12	M6 x 8 x 12

L	M	N	O
x 2	x 2	x 4	M4 x 12 x 6
P	**Q**	**R**	**S**
x 8	x 18	M4 x 19 x 18	x 2
T	**U**	**V**	**W**
x 2	M8 x 38 x 2	x 1	M10 x 25 x 6

1

1	B
x 1	x 10

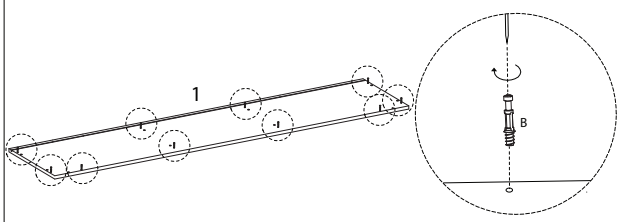

2

3	4	B	D
x 1	x 1	x 6	x 8

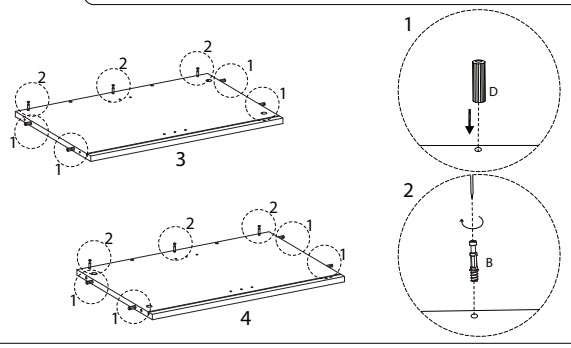

3

5	6	I1	I3	K
x 1	x 1	x 3	x 3	M6 x 8 x 12

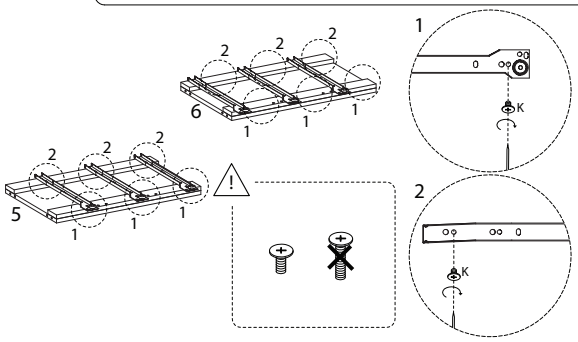

4

D
x 8

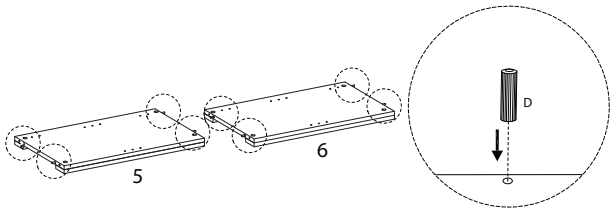

5 x 2

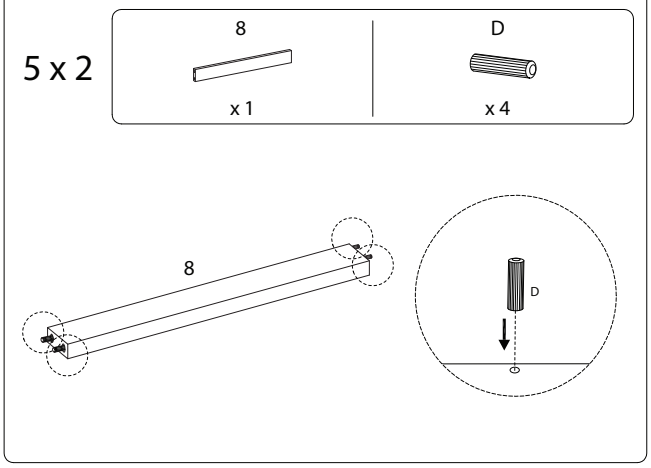

7

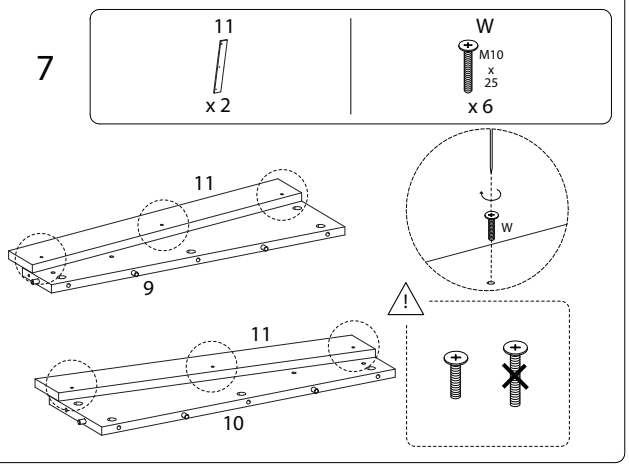

6

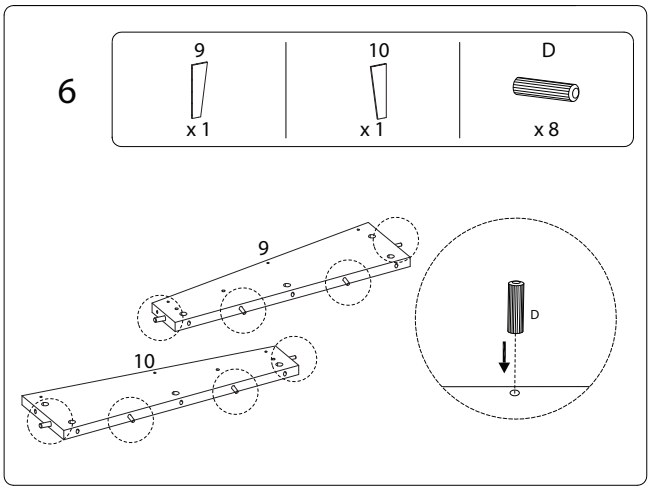

8

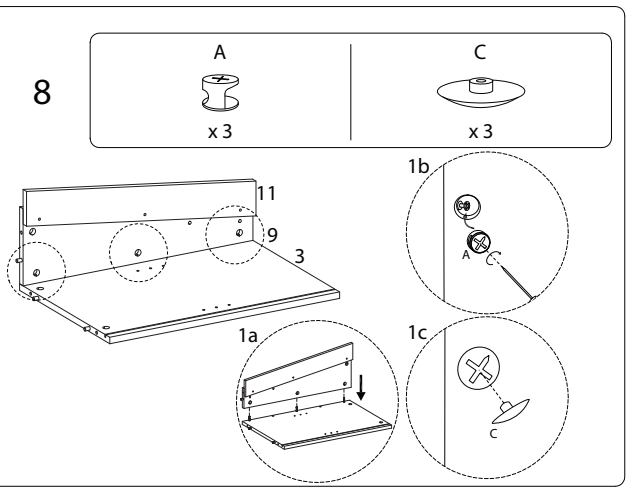

9

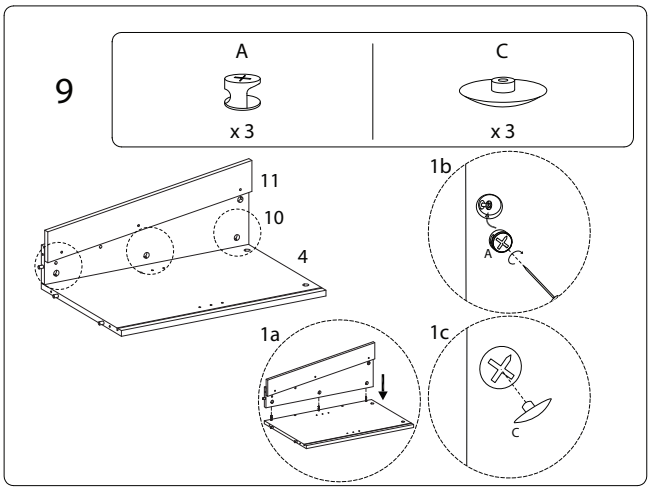

11

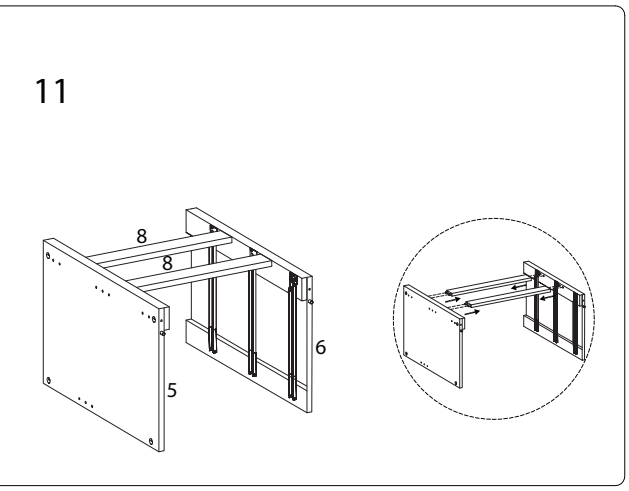

10

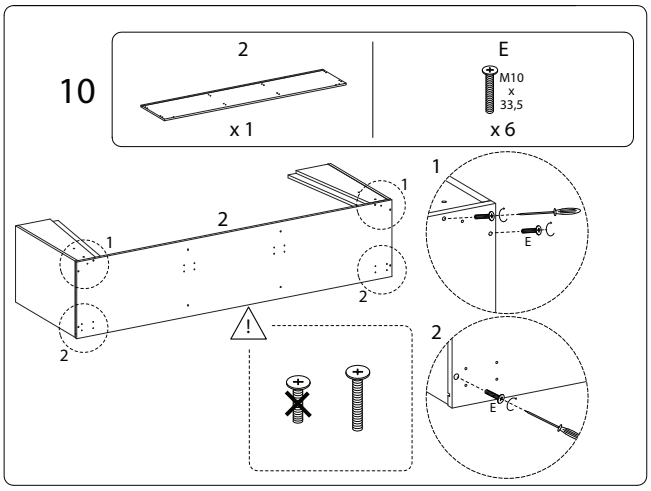

12

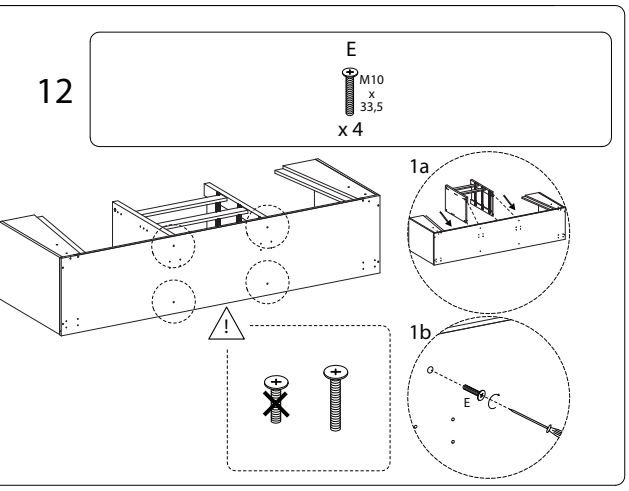

13

F	G1	G2	H
M4 x 10			M6 x 25
x 1	x 1	x 1	x 1

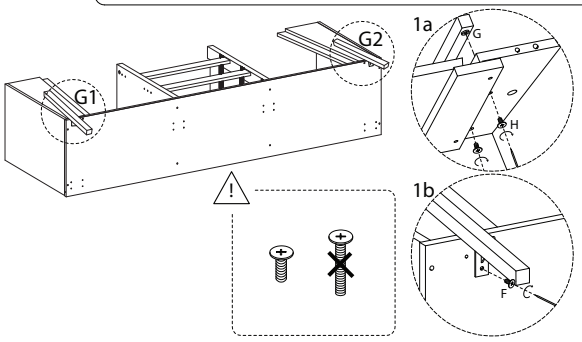

14

F	L	M
M4 x 10		
x 16	x 2	x 2

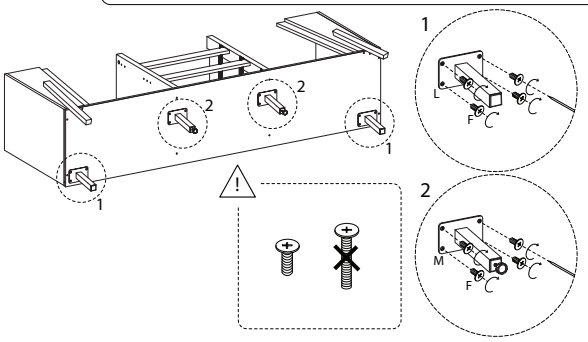

15

7	P
x 2	x 8

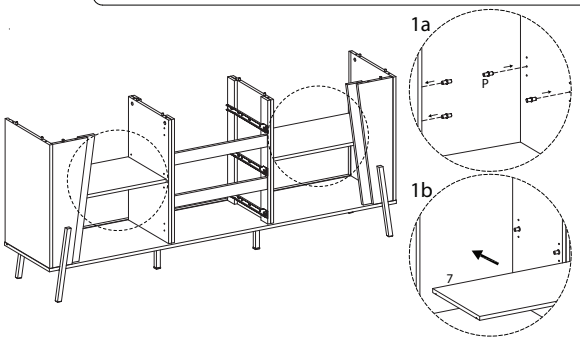

16

12	V
x 2	x 1

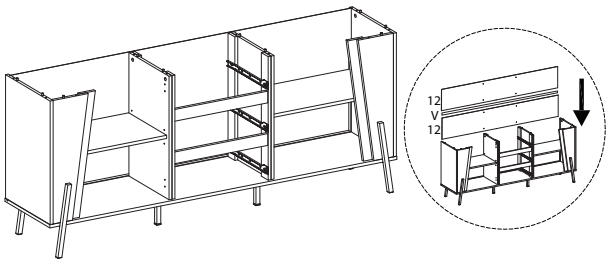

17

A	C
x 10	x 10

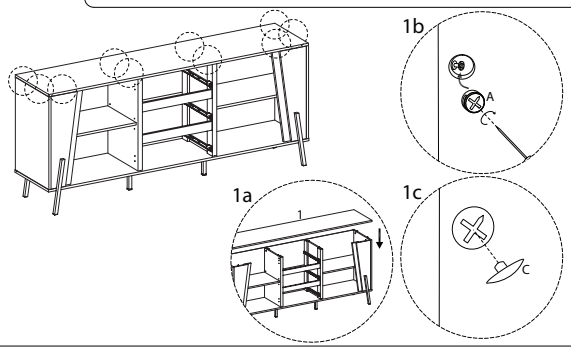

19

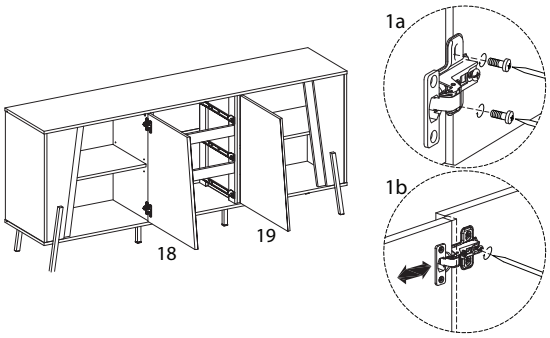

18

18	19	F	N
		M4 x 10	
x 1	x 1	x 8	x 4

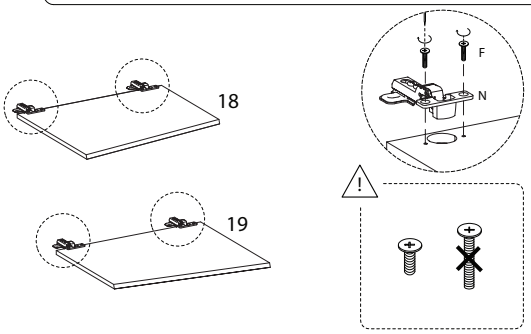

20

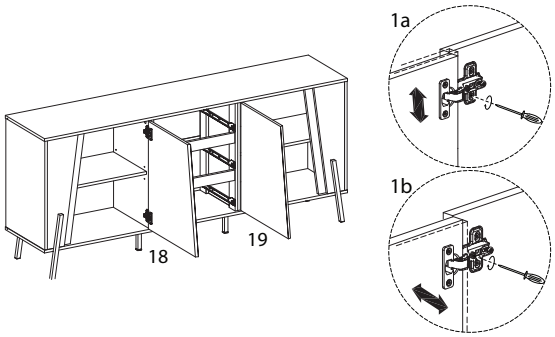

21 x 3

13	14	15	16	B	D
x 1	x 1	x 1	x 1	x 2	x 8

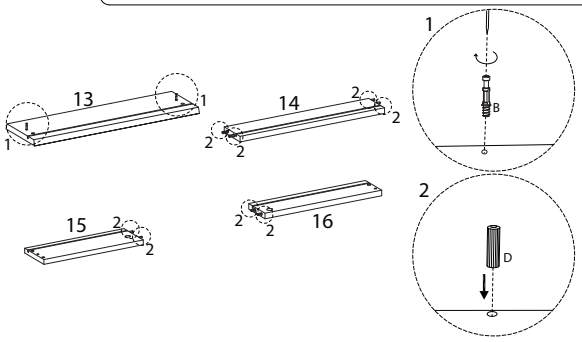

23 x 3

A	C
x 2	x 2

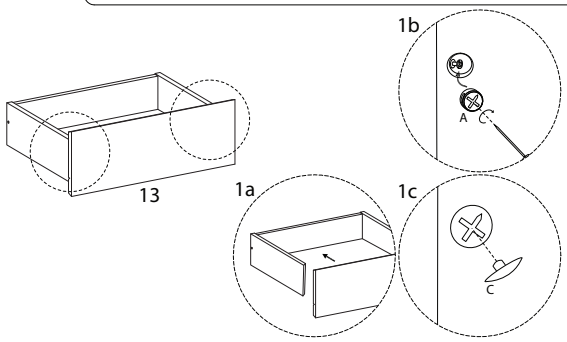

22 x 3

17	E
x 1	M10 x 33,5 x 2

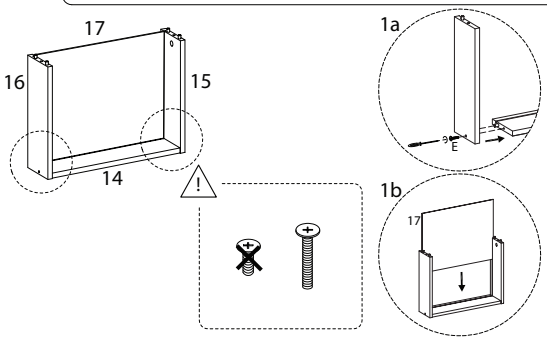

24 x 3

J	I2	I4
M6 x 13 x 4	x 1	x 1

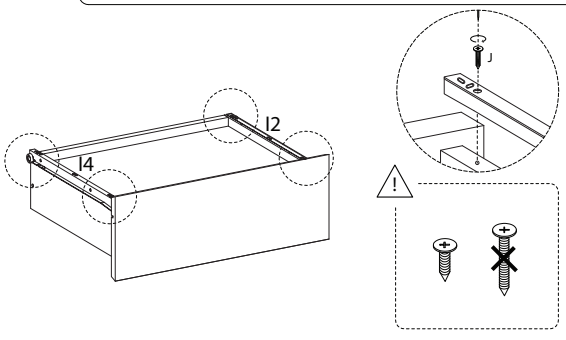

25

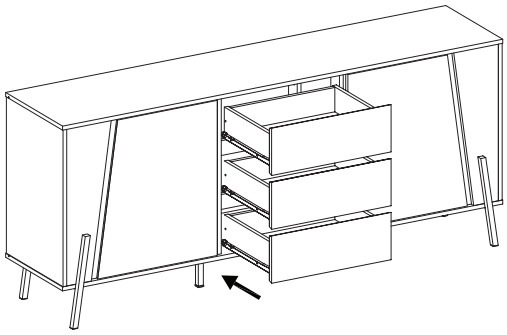

27

O	S
M4 x 19 x 6	x 2

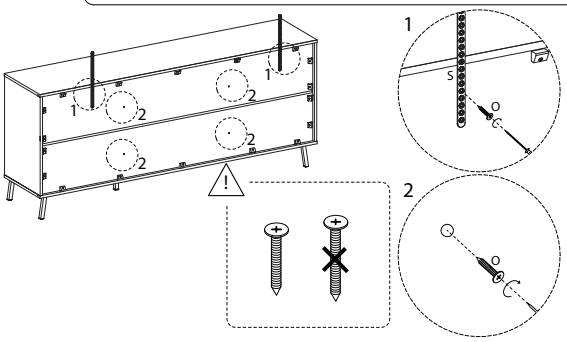

26

Q	R
x 18	M3 x 20 x 18

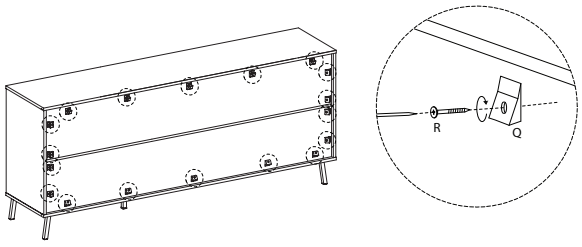

28

T
x 2

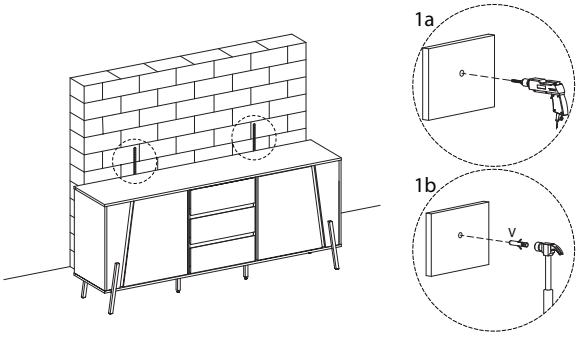

29

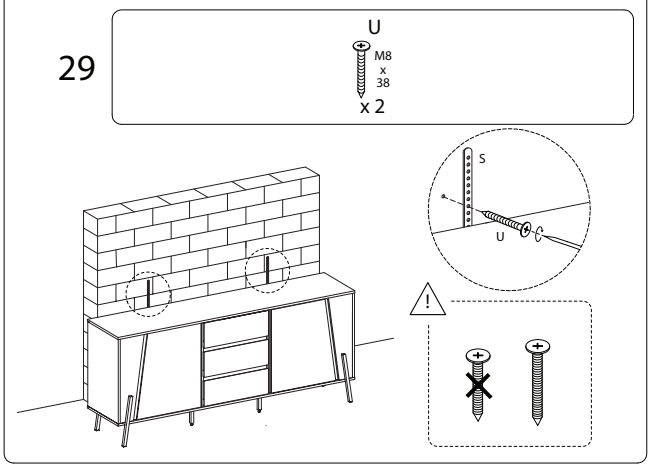

30

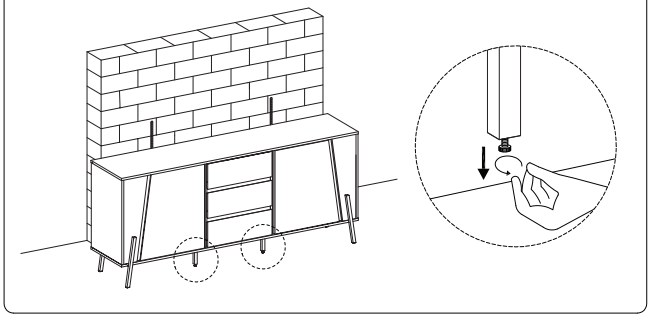

918/BLACKPOOL/110225/