

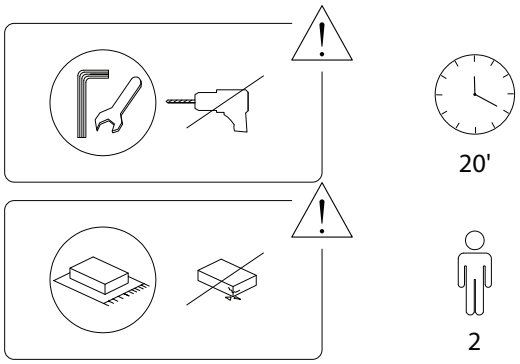

1/4

1363/FARLEY/240522/

A	B	C	D
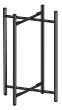	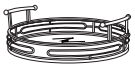	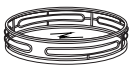	 M6 x 18
x 1	x 1	x 1	x 4

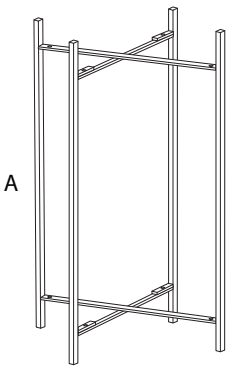

E	F	G	H	I
 M6 x 25				
x 4	x 1	x 2	x 2	x 1

2/4

1363/FARLEY/240522/

1

A

x 1

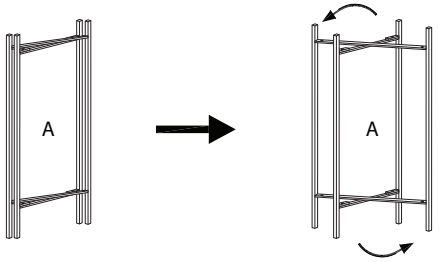

2

C	D	E	F
	 M6 x 18	 M6 x 25	
x 1	x 2	x 2	x 1

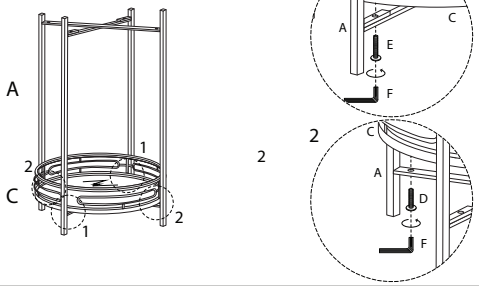

3/4

1363/FARLEY/240522/

3

B	D	E	F
	 M6 x 18	 M6 x 25	
x 1	x 2	x 2	x 1

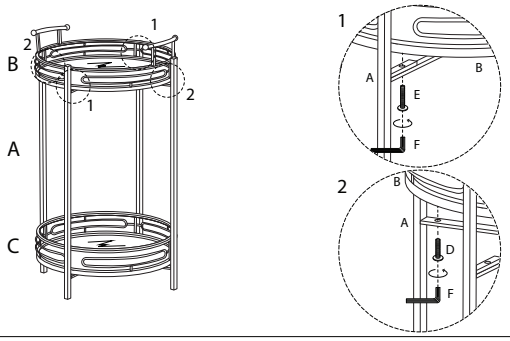

4

G	H	I
		
x 2	x 2	x 1

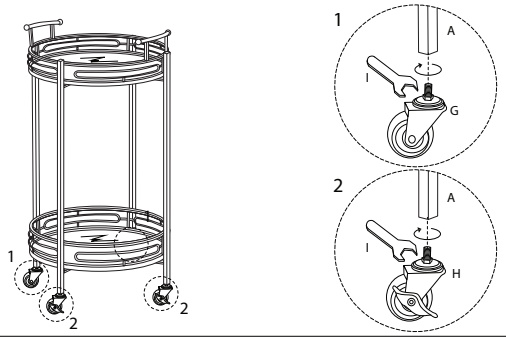

4/4

1363/FARLEY/240522/