BAUCINA

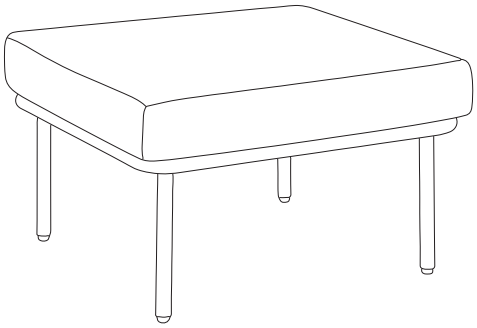

1/5

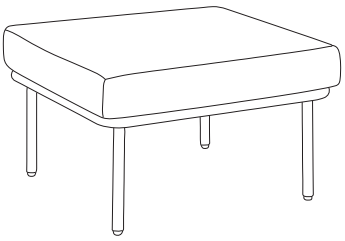

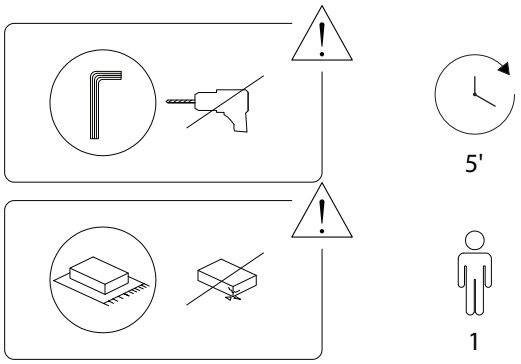

2/5

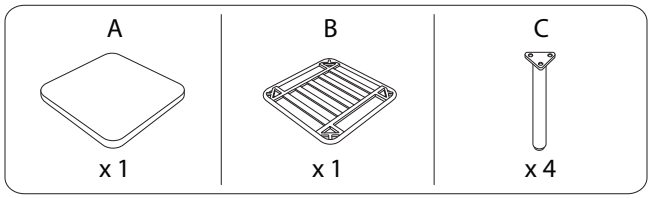

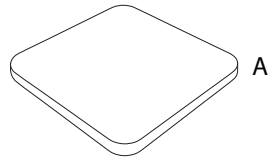

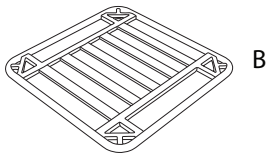

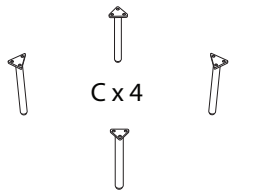

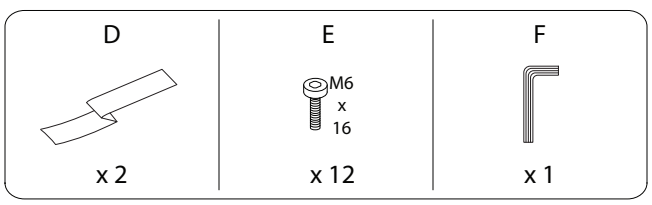

3/5

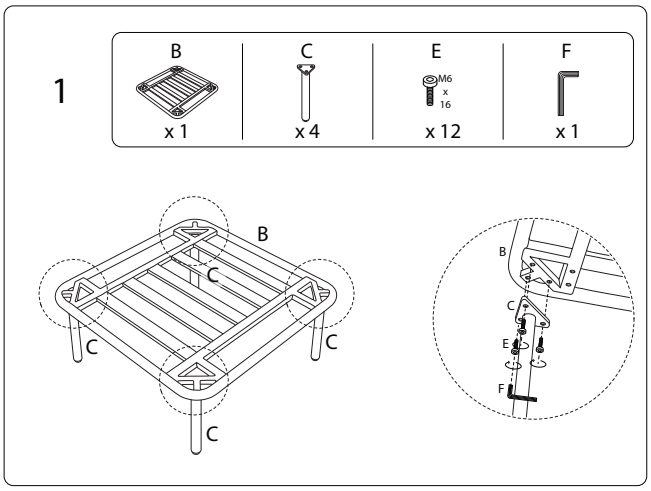

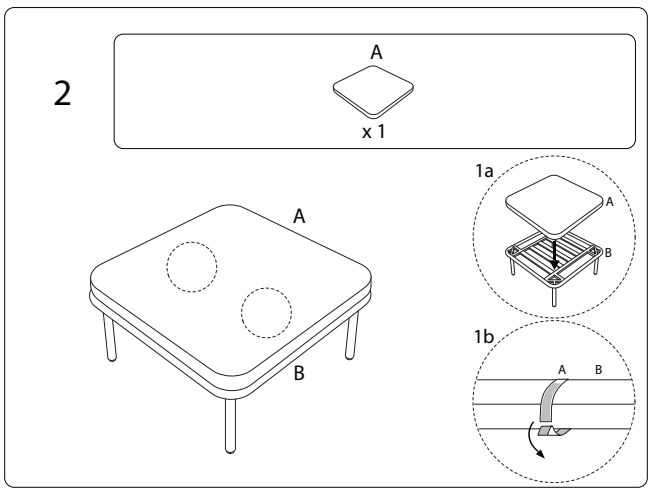

4/5

!

D

x 2

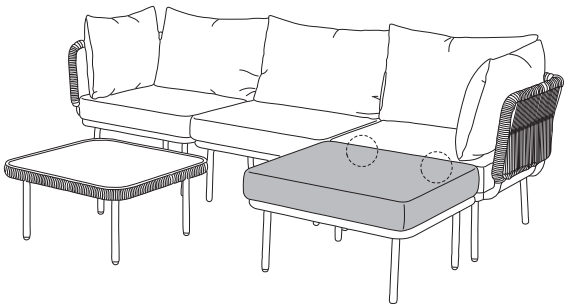

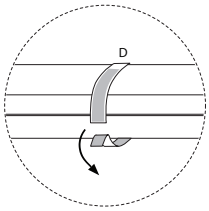

2651/BAUCINA/220926/