NEWPORT + KIKORI

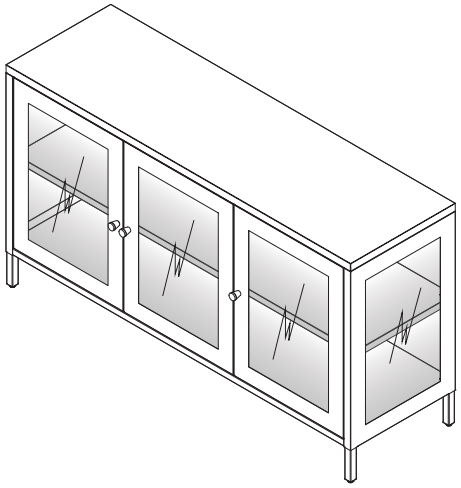

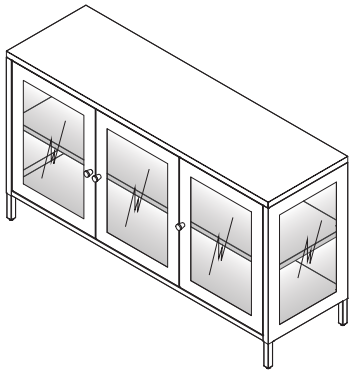

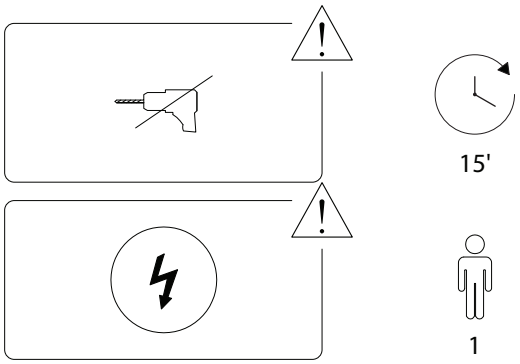

1/3

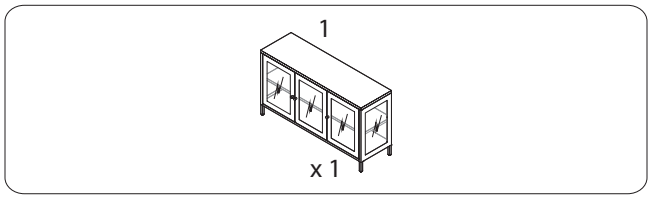

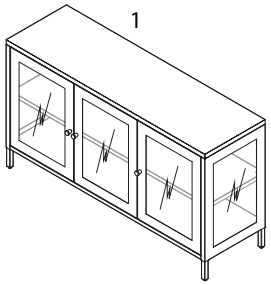

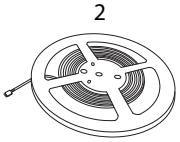

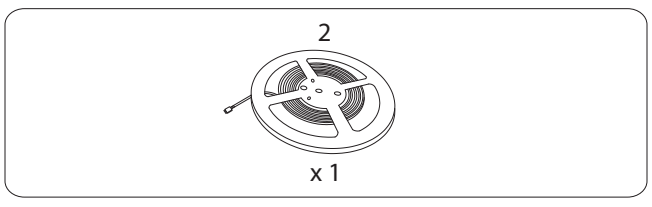

2/3

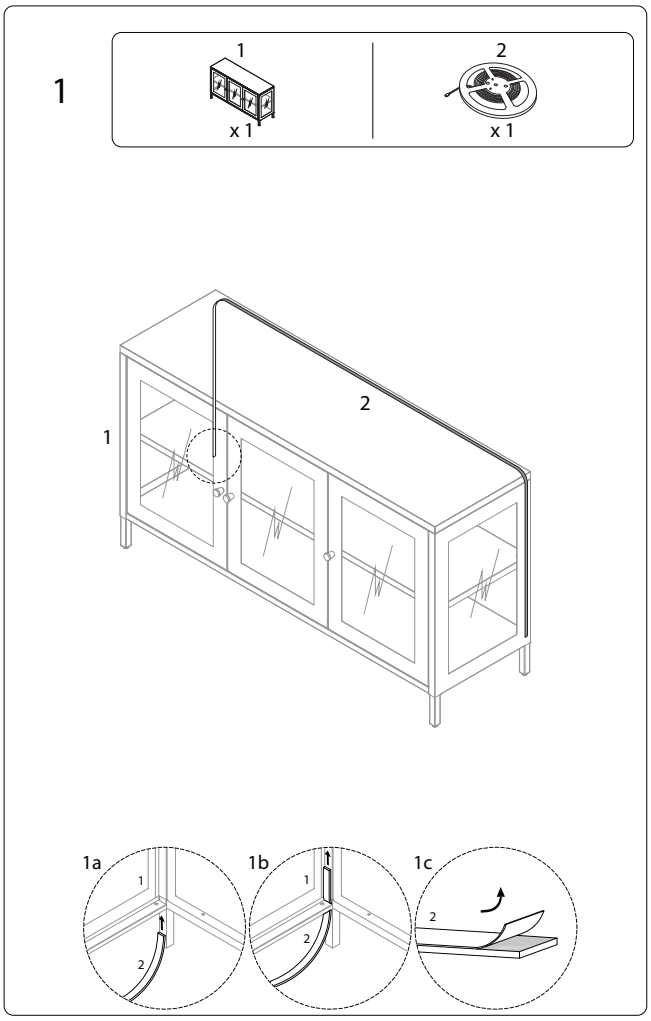

3/3

1914/NEWPORT+KIKORI/281025/