FALSTERBO

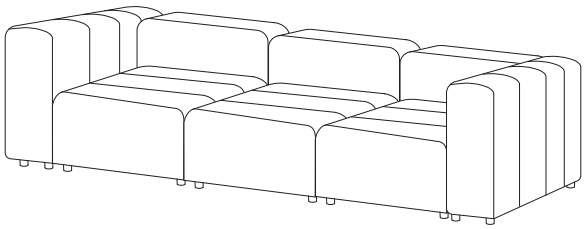

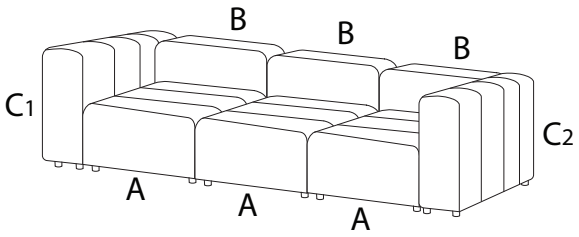

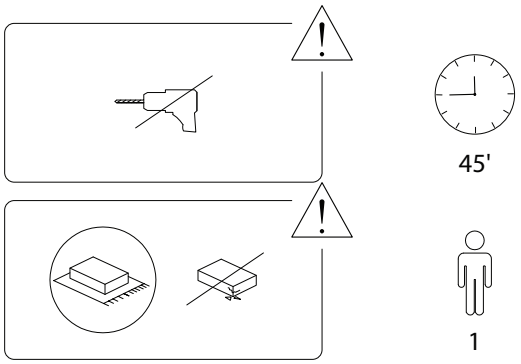

1/11

A

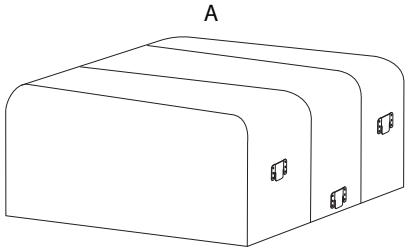



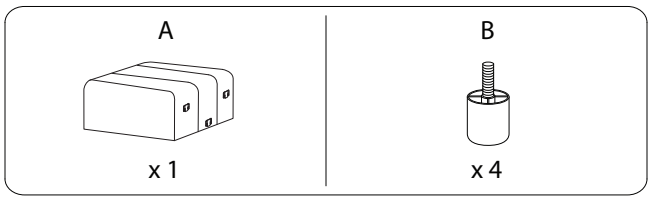

2/11

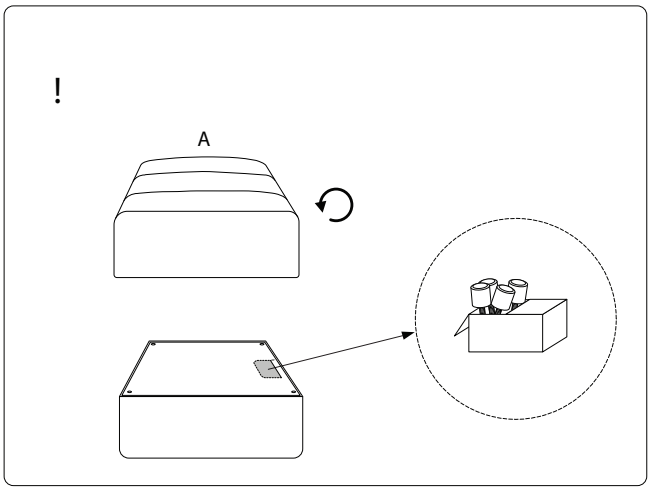

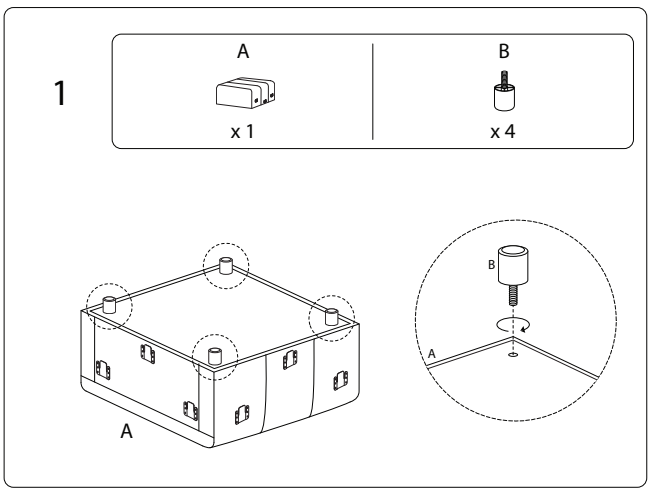

3/11

B

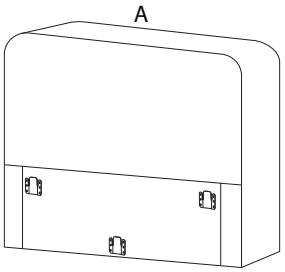
A


B x 4

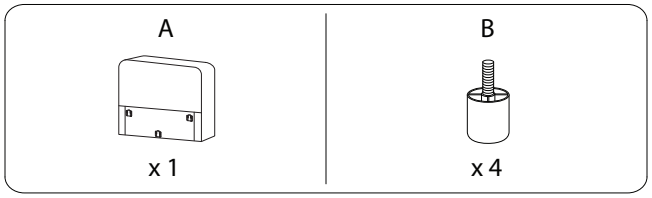
A
x 1
B
x 4

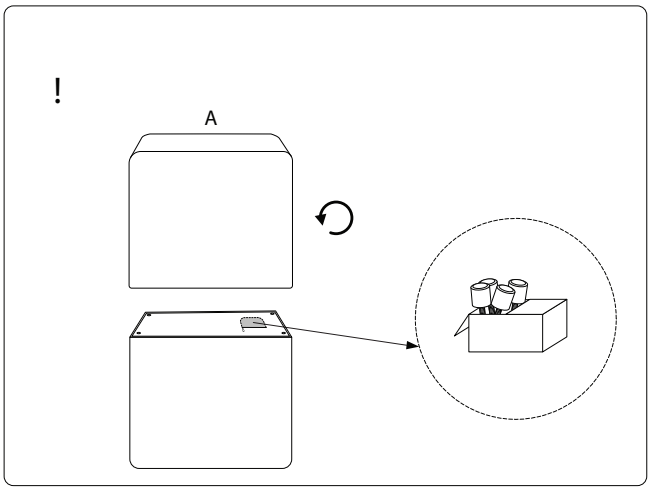
!
A

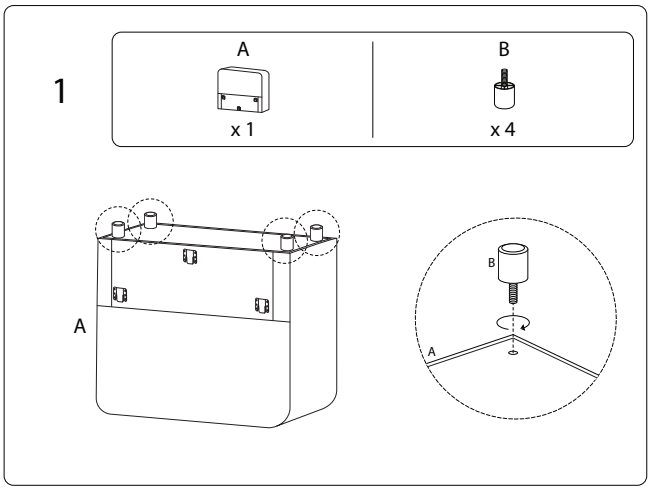
1
A
x 1
B
x 4
A
B
A

C

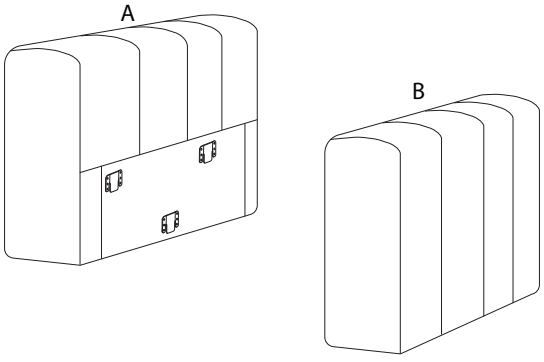
A
B

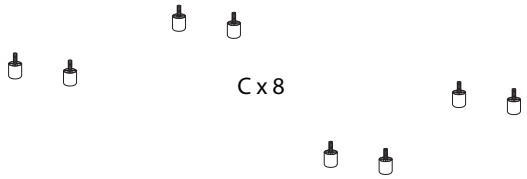
C x 8

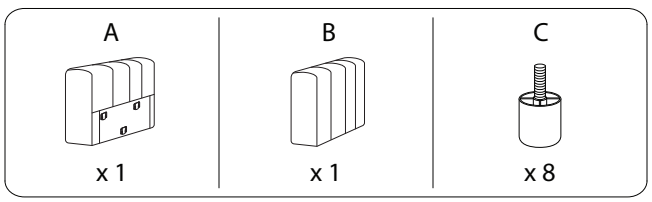
A
x 1
B
x 1
C
x 8

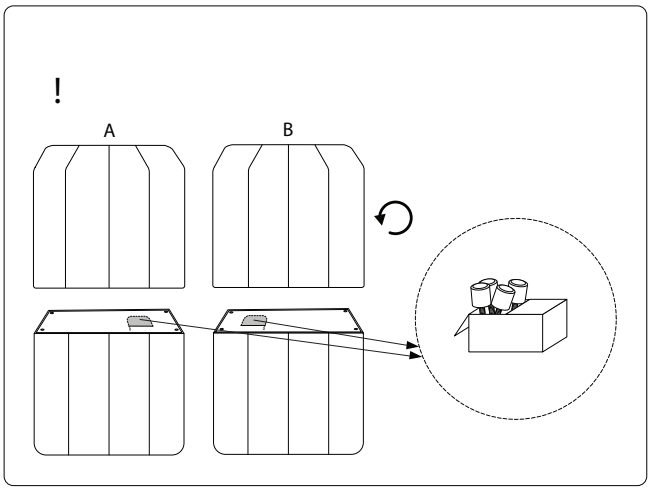
!
A
B

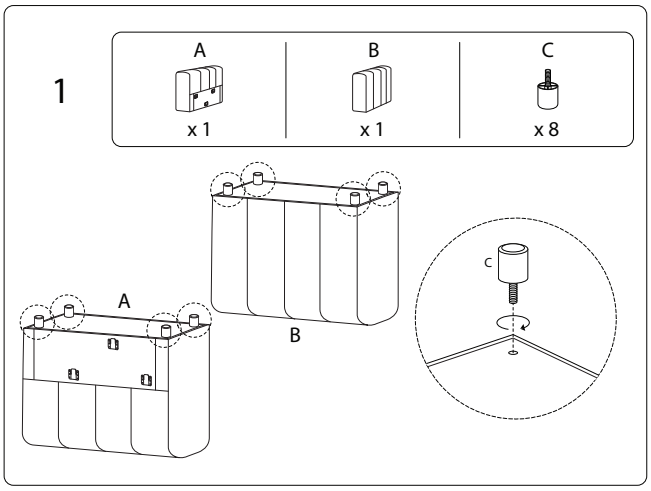
1
A
x 1
B
x 1
C
x 8
A
B
C

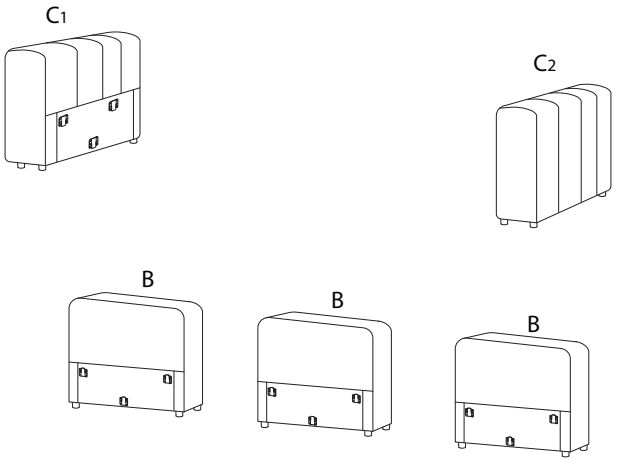

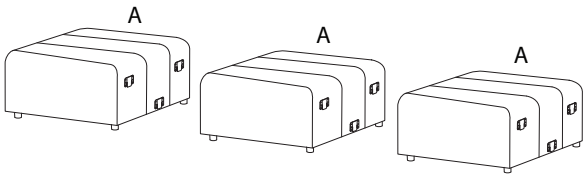

A	B	C1	C2
x 3	x 3	x 1	x 1

1 x 3

A	B
x 1	x 1

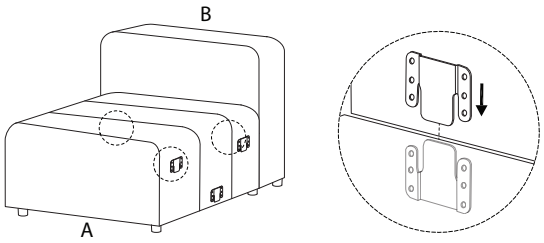

2

C1	C2
x 1	x 1

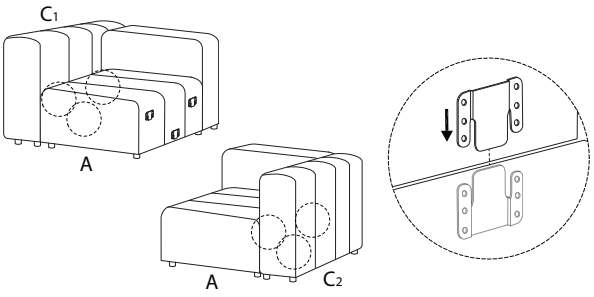

3

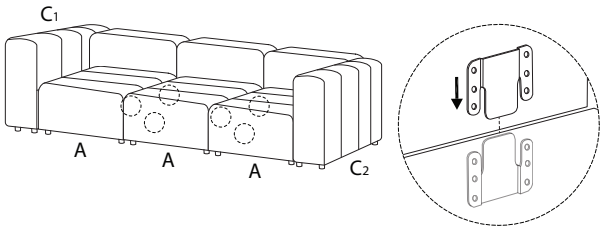

!

