CLOUDY

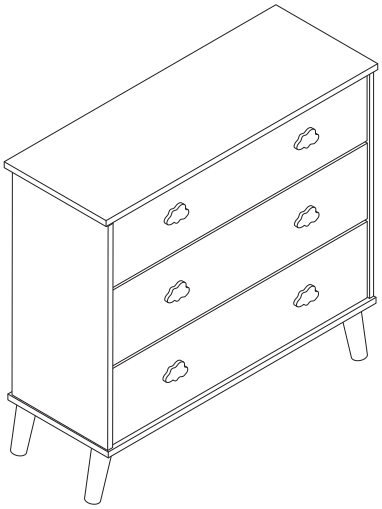

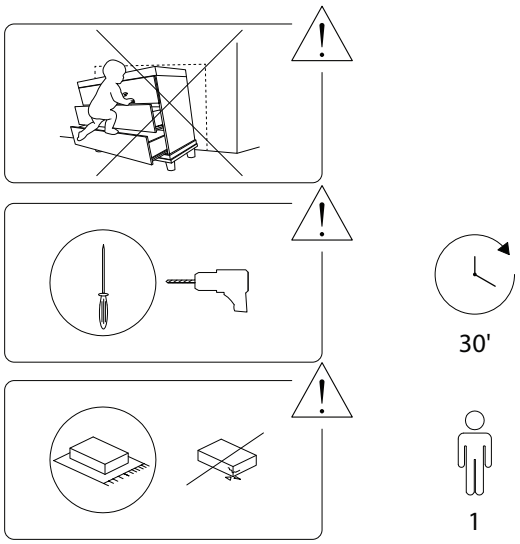

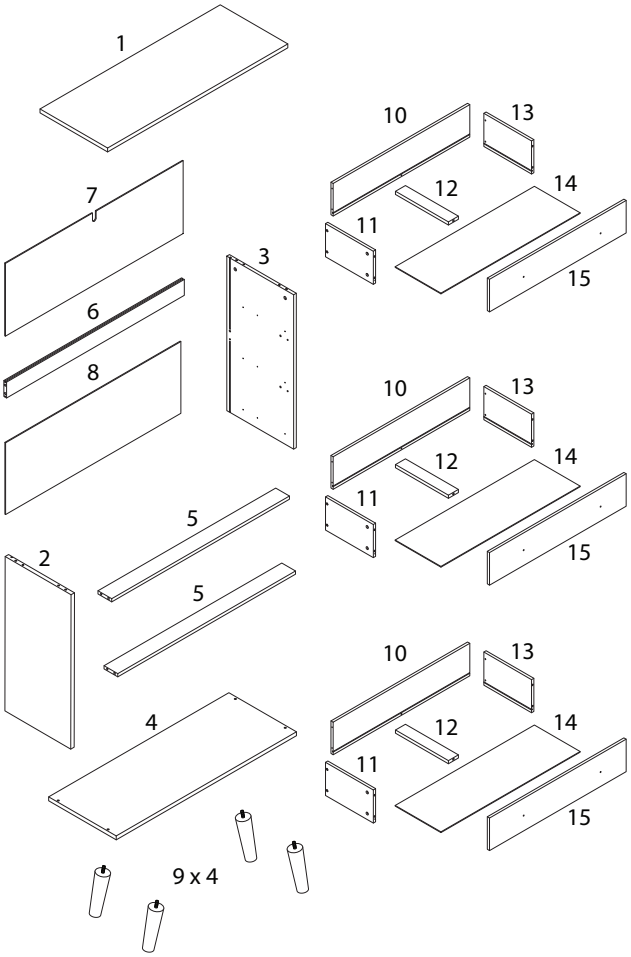

1 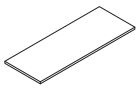 x 1	2 x 1	3 x 1
4 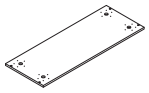 x 1	5 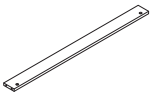 x 2	6 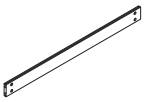 x 1
7 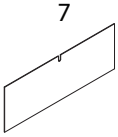 x 1	8 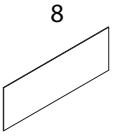 x 1	9 x 4
10 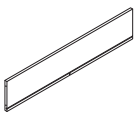 x 3	11 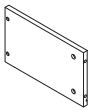 x 3	12 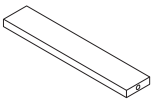 x 3
13 x 3	14 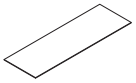 x 3	15 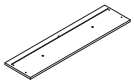 x 3

A	B	C	D
M6 x 35		M6 x 30	M3 x 10
x 27	x 27	x 12	x 30
E	**F**	**G**	**H**
M4 x 10	M5 x 35	M4 x 14	M4 x 25
x 21	x 4	x 10	x 15
I	**J**	**K**	**L**
x 1	x 1	x 4	x 10
M	**N**	**O**	**CL**
M4 x 30	M4 x 25		
x 1	x 6	x 6	x 3
CR	**DL**	**DR**	
x 3	x 3	x 3	

1

2	D	CL
x 1	M3 x 10 x 9	x 3

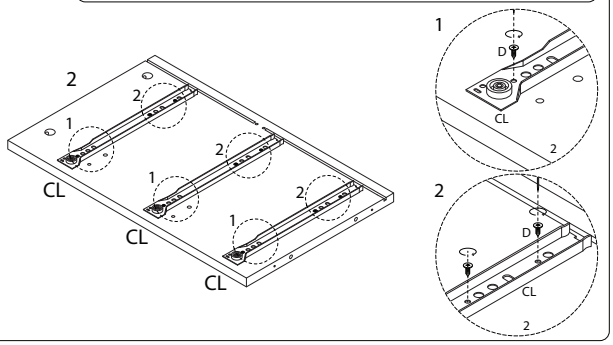

2

3	D	CR
x 1	M3 x 10 x 9	x 3

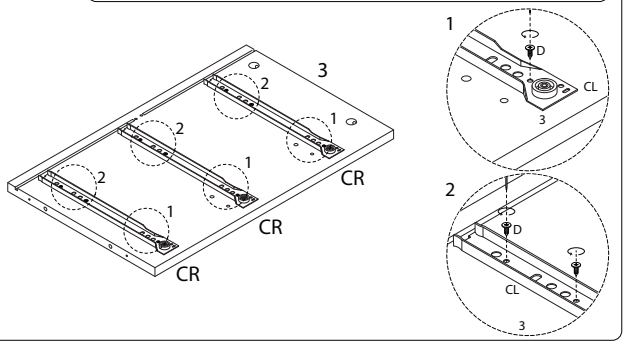

3

A
M6 x 35
x 8

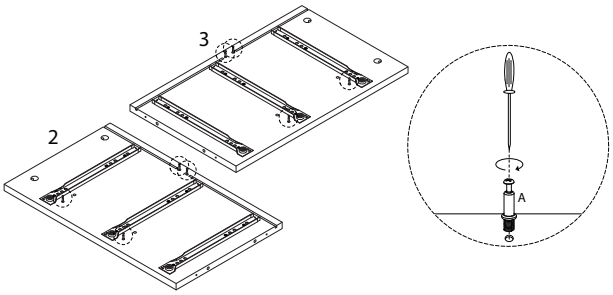

5

6
x 1

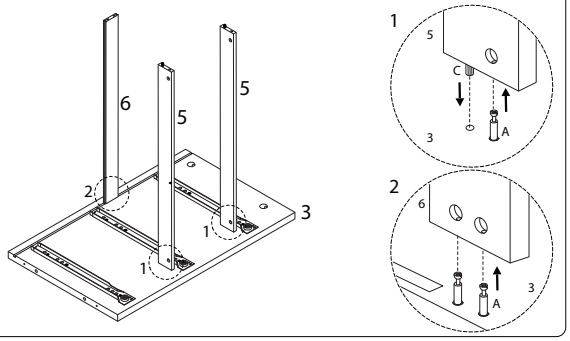

4 x 2

5	C
x 1	M6 x 30 x 2

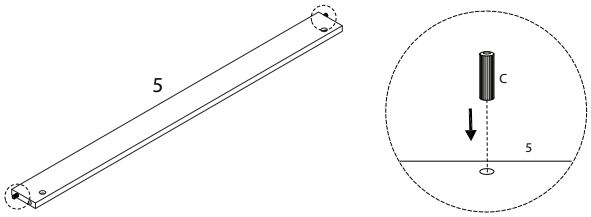

6

B
x 4

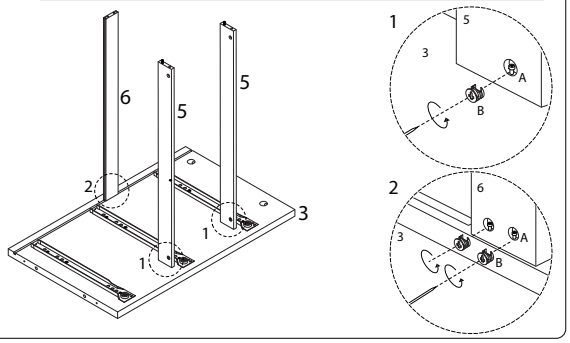

7

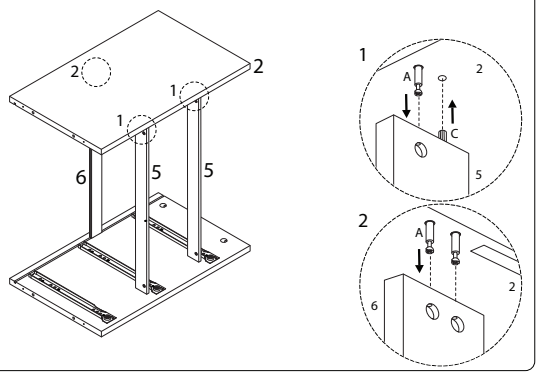

8

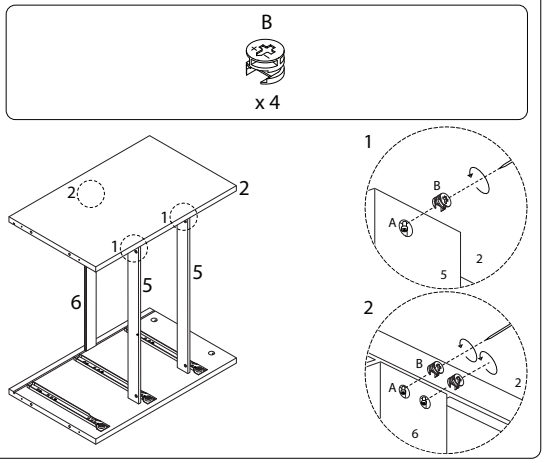

9

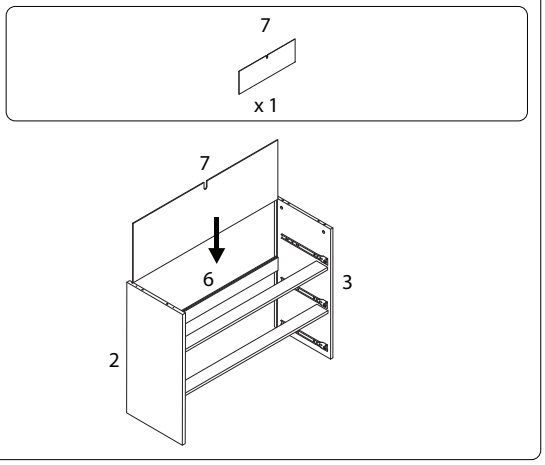

10

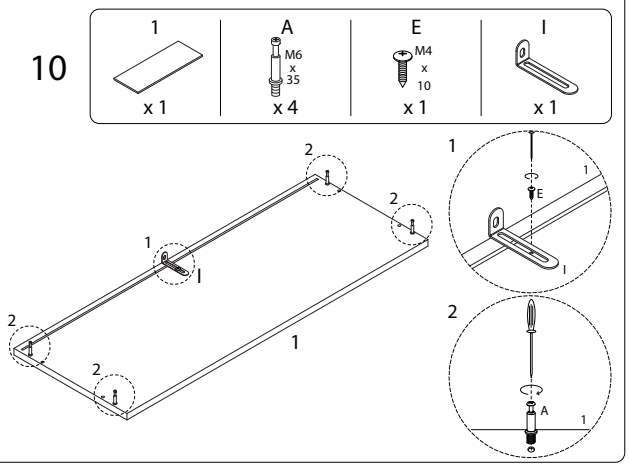

11

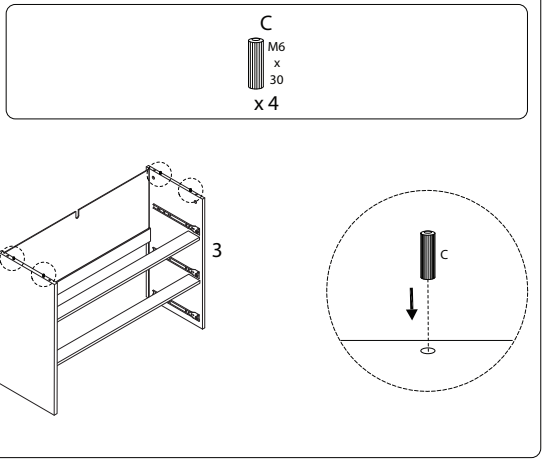

12

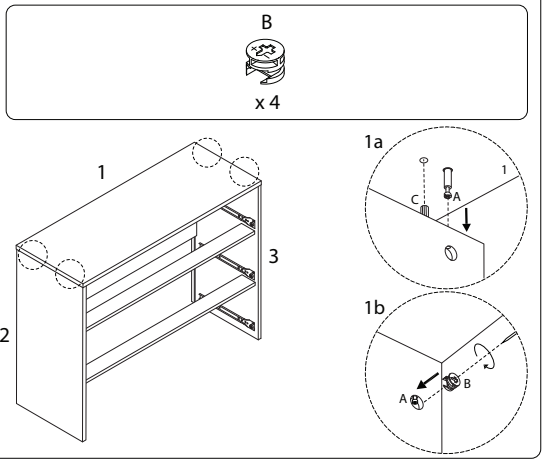

13

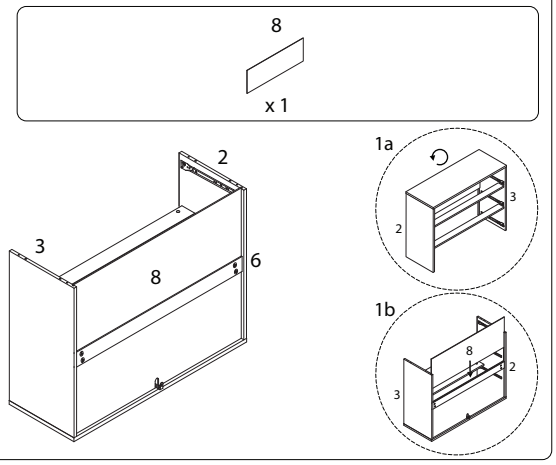

14

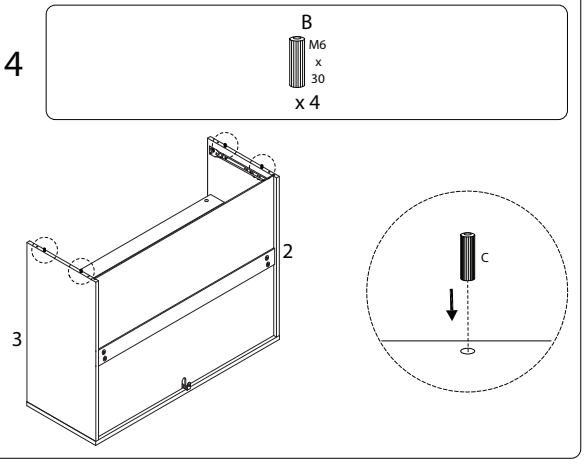

15

4	F
x 1	M5 x 35 x 4

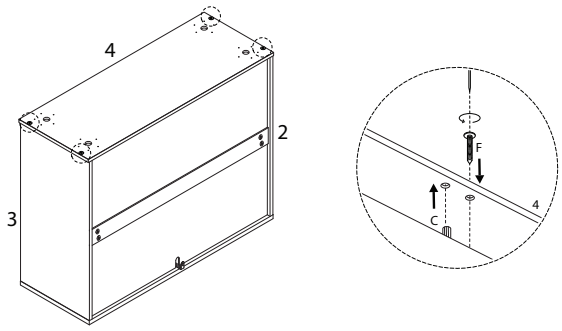

16

E	K
M4 x 10 x 20	x 4

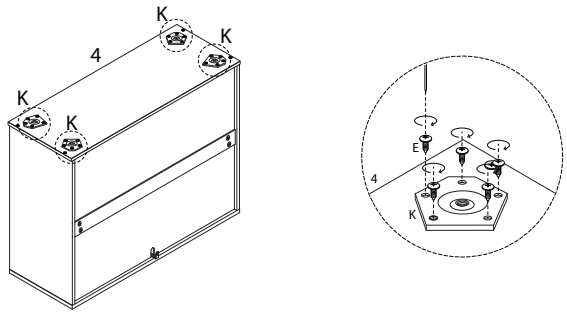

17

9
x 4

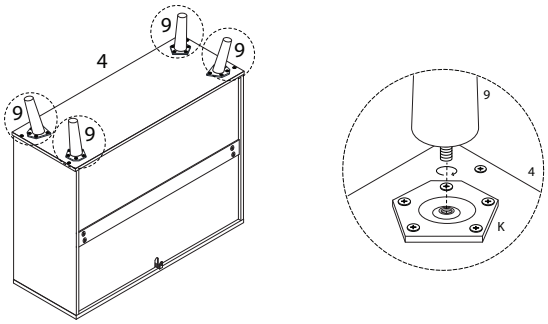

18

G	L
M4 x 14 x 10	x 10

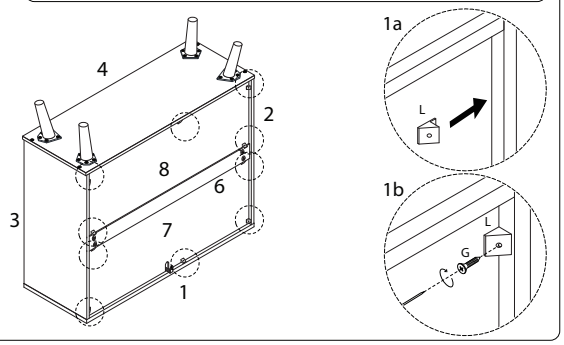

19 x 3

H	10	11	12	13
M4 x 25 x 5	x 1	x 1	x 1	x 1

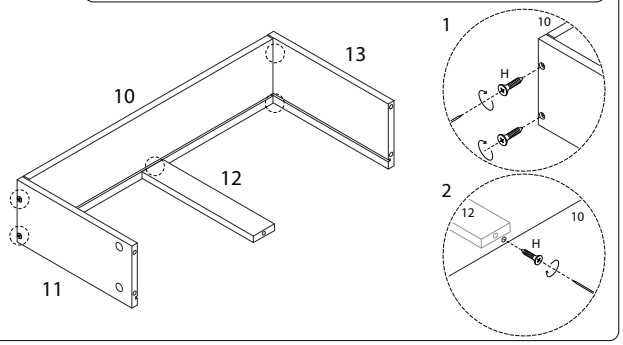

21 x 3

A	15
M6 x 35 x 5	x 1

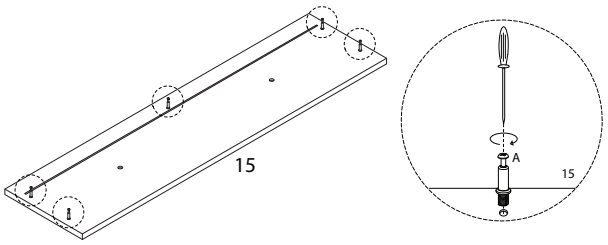

20 x 3

14
x 1

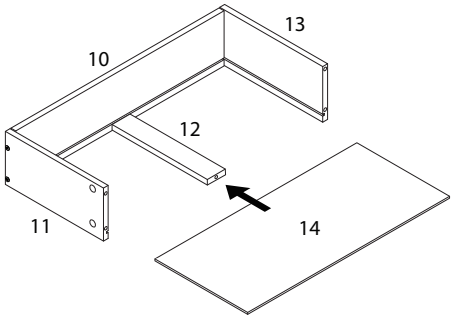

22 x 3

B
x 5

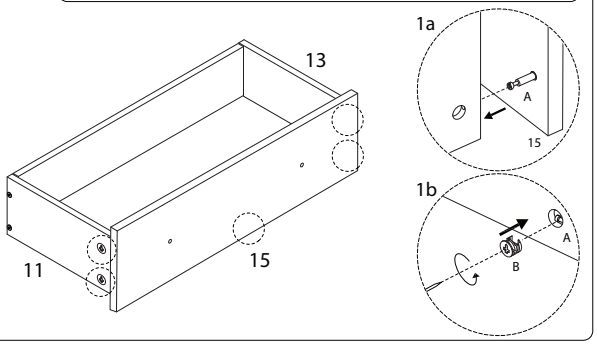

23 x 3

N	O
M4 x 25	
x 2	x 2

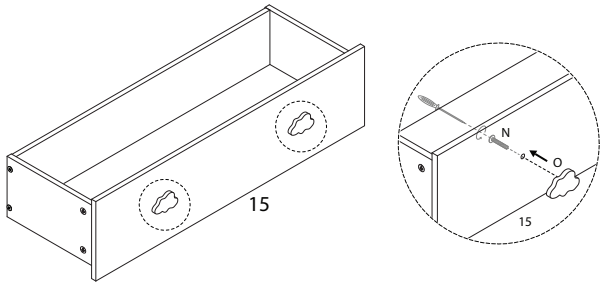

25

J
M6 x 30
x 1

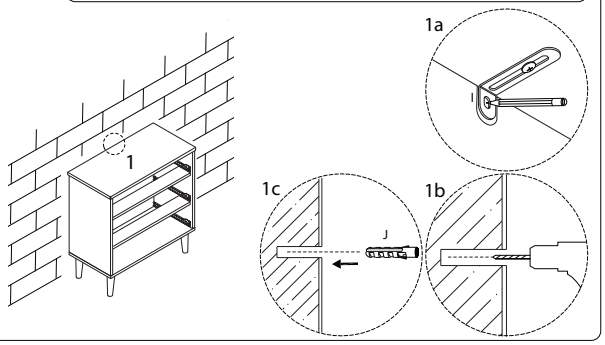

24 x 3

D	DL	DR
M3 x 10		
x 4	x 1	x 1

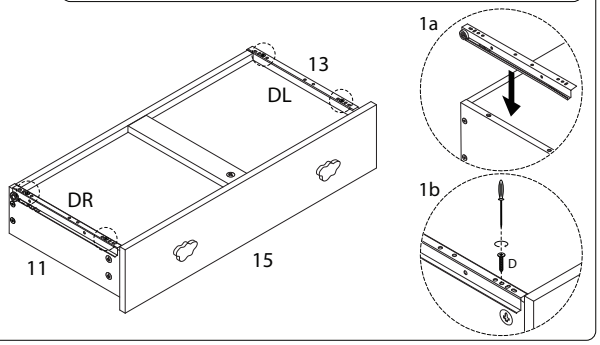

26

M
M4 x 30
x 1

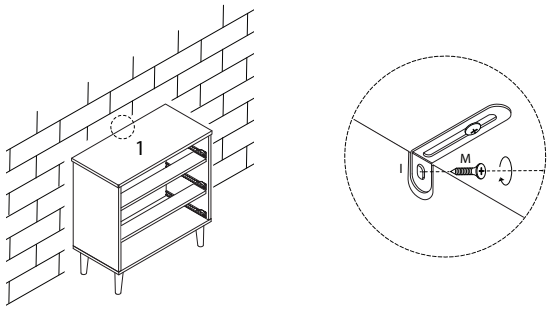
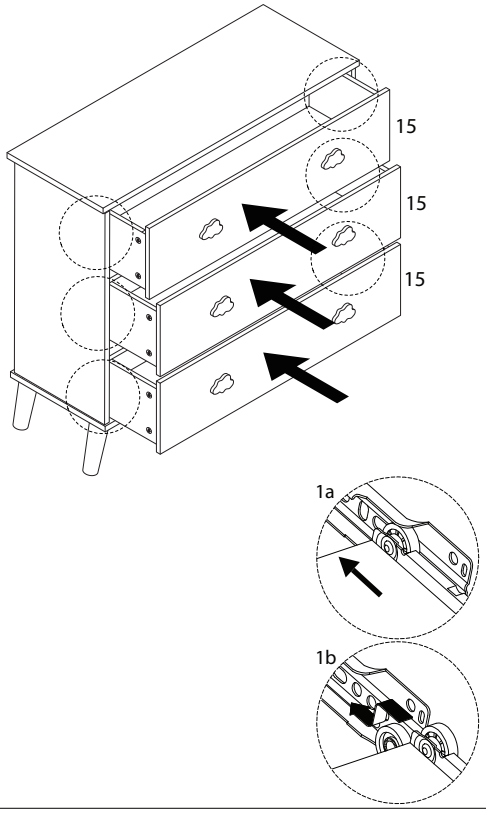
!