PENLY

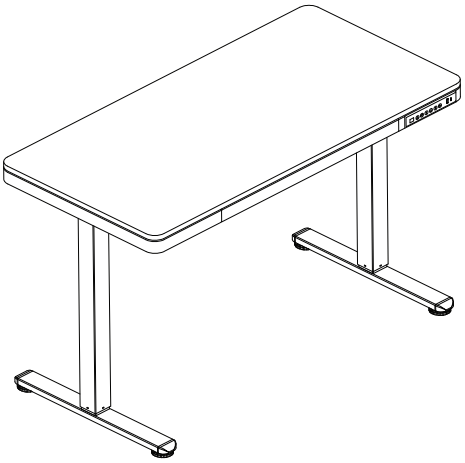

1/6

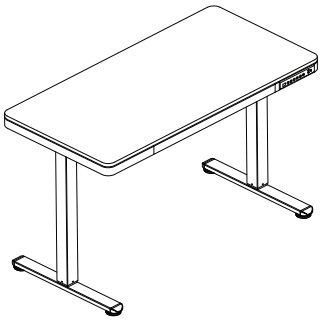

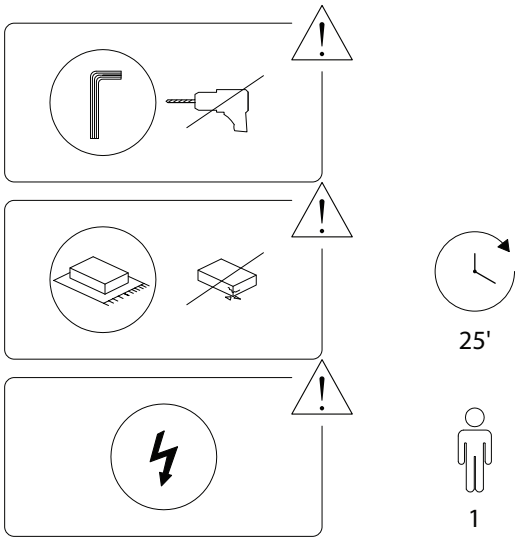

2/6

2728/PENLY/090126/

1	2	3	4	5	6
					 M6 x 16
x 1	x 1	x 1	x 2	x 1	x 8

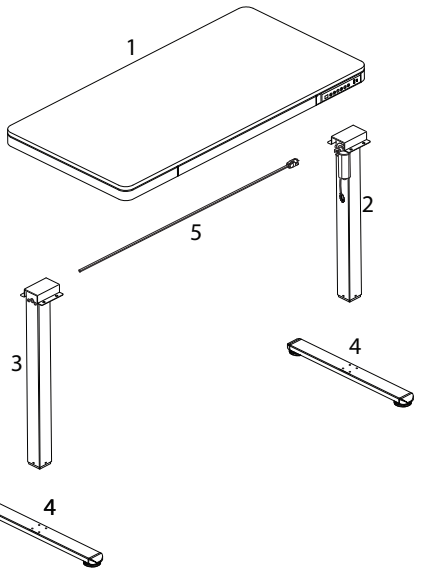

7	8	9	10	11	12
 M8 x 6	 M2	 M6 x 30	 M4		
x 1	x 1	x 8	x 1	x 1	x 2

3/6

2728/PENLY/090126/

1

1	2	3	6	10
			 M6 x 16	 M4
x 1	x 1	x 1	x 8	x 1

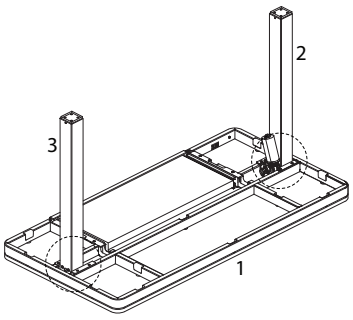

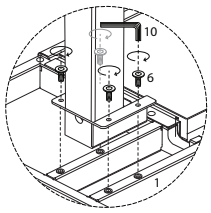

2

5	7	8
	 M8 x 6	 M2
x 1	x 1	x 1

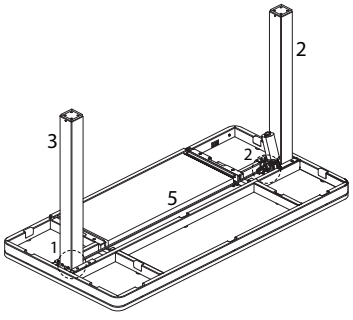

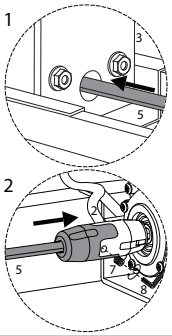

4/6

2728/PENLY/090126/

3

4	9	10
		
x 2	x 8	x 1

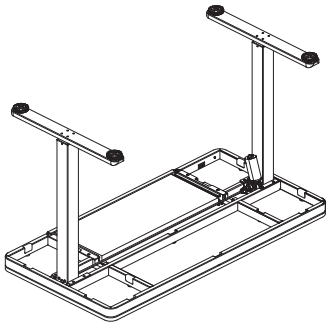

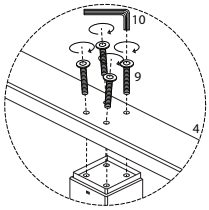

4

11	12
	
x 1	x 1

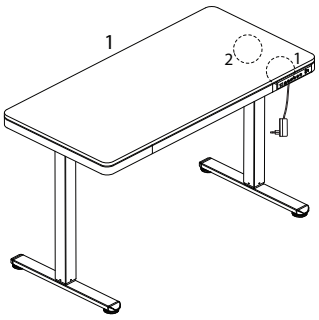

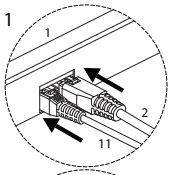

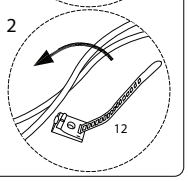

!

