TOKO

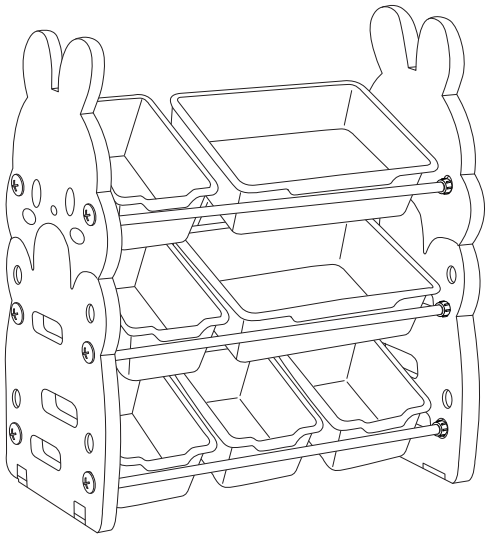

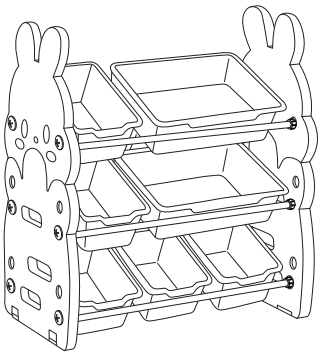

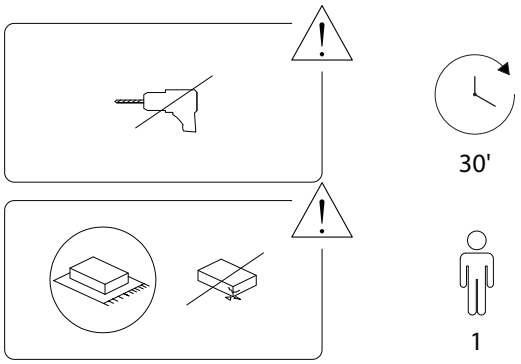
30'
1

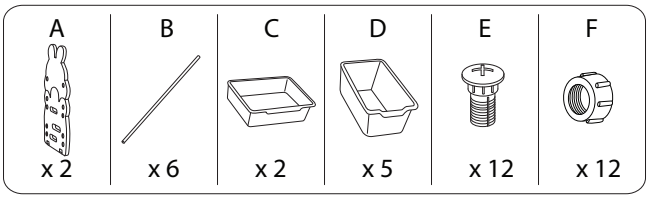
A
x 2
B
x 6
C
x 2
D
x 5
E
x 12
F
x 12

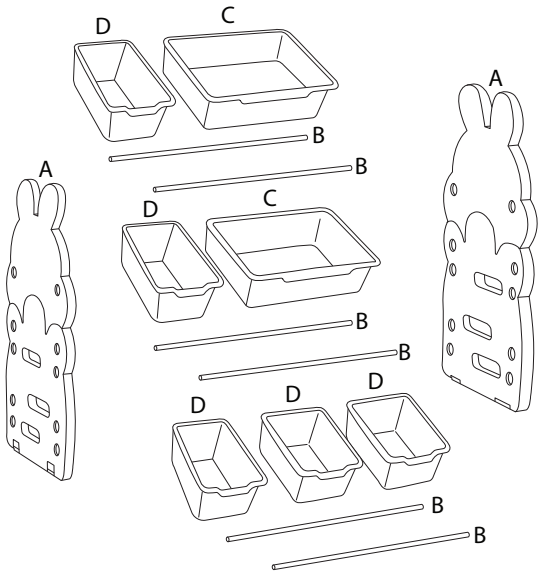
D
C
B
B
A
A
D
C
B
B
D
D
D
B
B

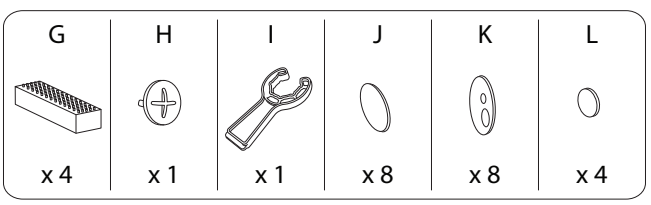
G
x 4
H
x 1
I
x 1
J
x 8
K
x 8
L
x 4

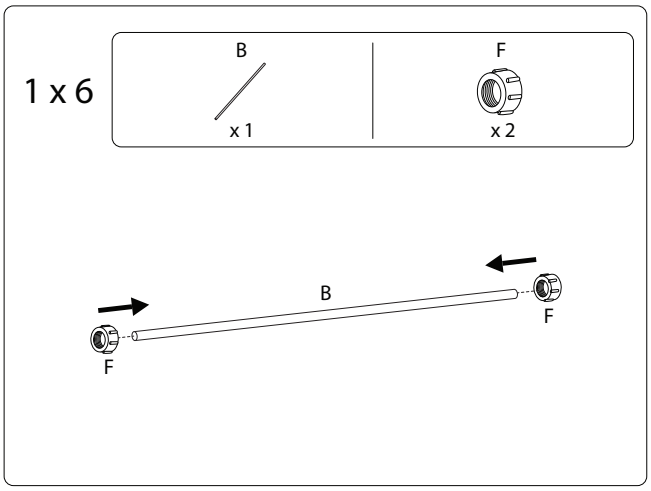
1 x 6
B
x 1
F
x 2
B
F
F

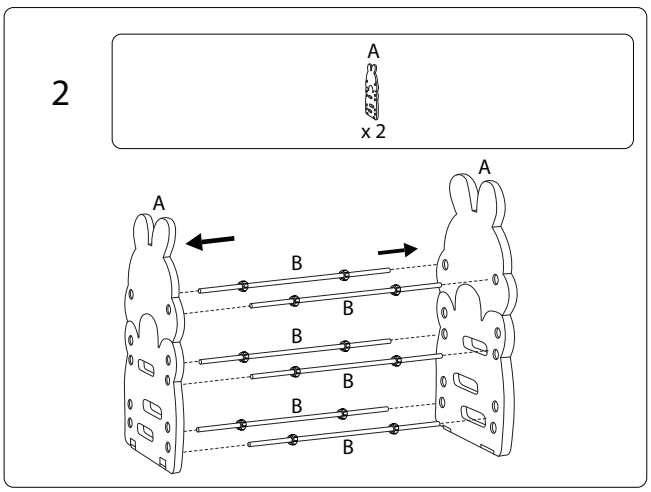
2
A
x 2
A
A
B
B
B
B
B
B

3

E	H	I
x 12	x 1	x 1

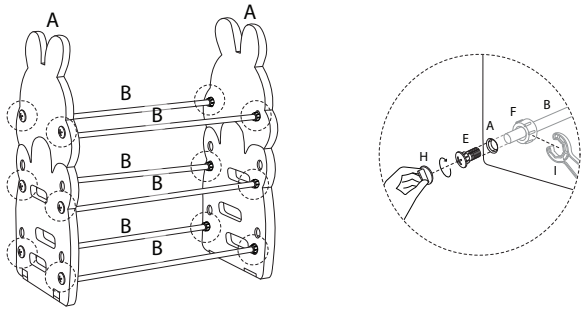

4

G
x 4

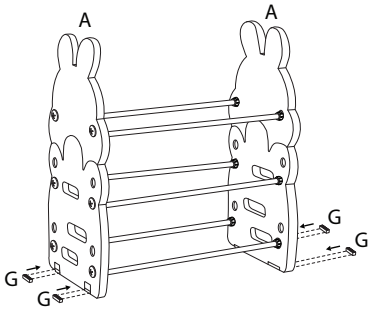

2902/TOKO/141026/

5

J	K	L
x 4	x 4	x 8

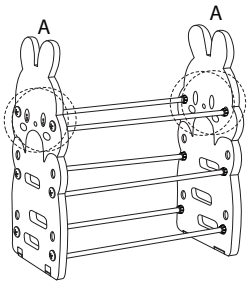

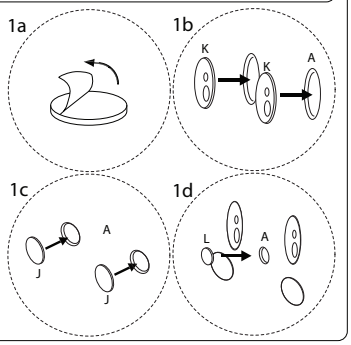

6

C	D
x 2	x 5

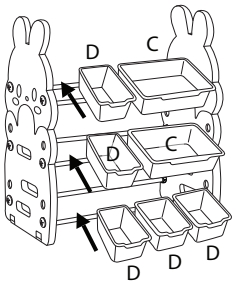

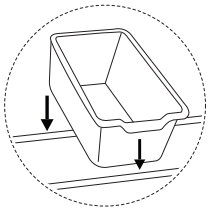

2902/TOKO/141026/