PACLLON

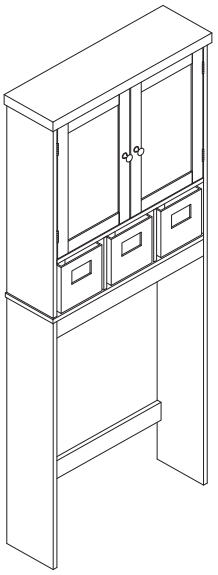

1/17

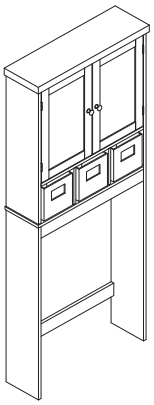

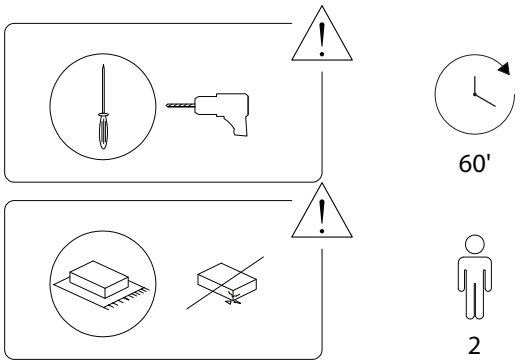

2/17

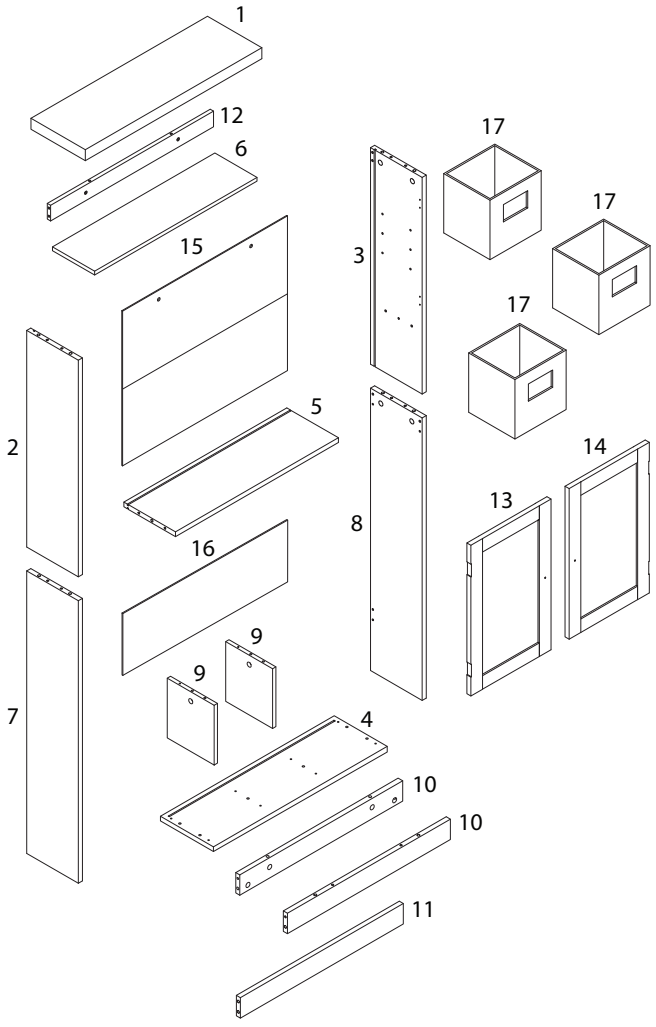

3/17

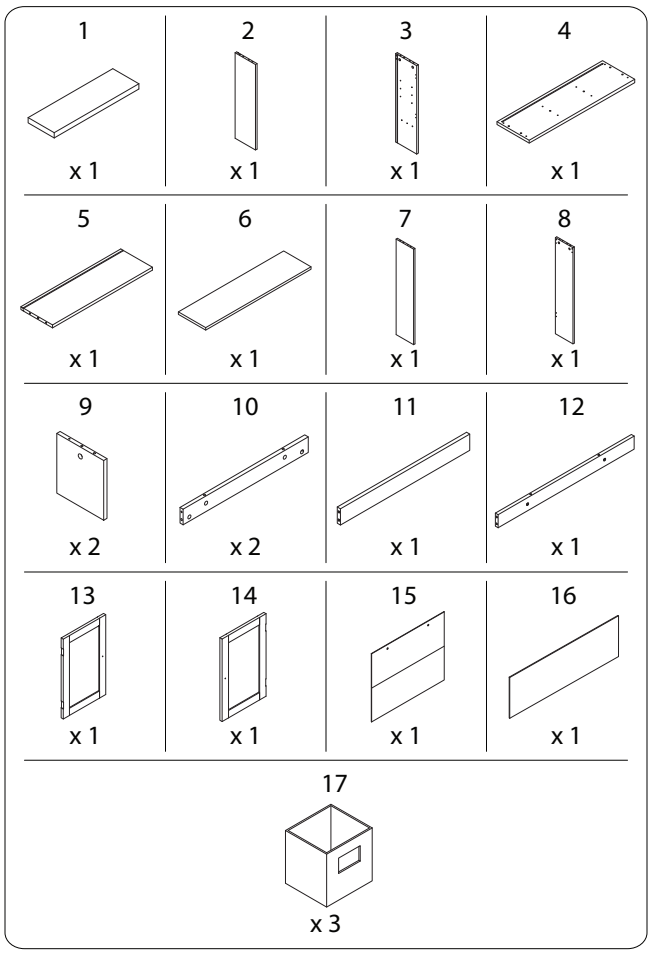

4/17

A	B	C	D
			
x 36	x 24	x 24	x 2

E	F	G	H1
			
x 18	x 8	x 2	x 8

H2	I	J	K
	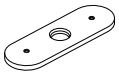	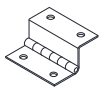	
x 8	x 2	x 4	x 4

L	M
	
x 2	x 1

N1	N2
	
x 2	x 2

1

2	3	5	B
			
x 1	x 1	x 1	x 4

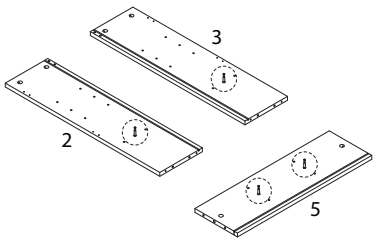

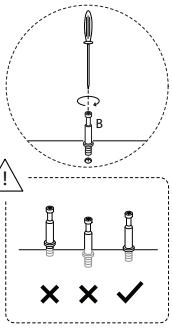

2 x 2

9	A
	
x 1	x 2

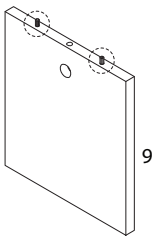

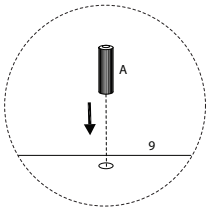

3

C

x 2

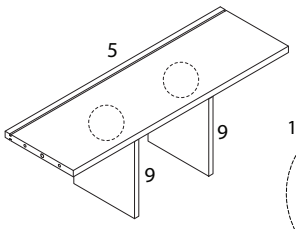

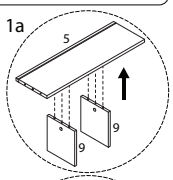

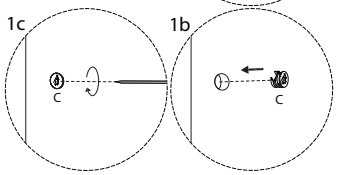

5

C

x 2

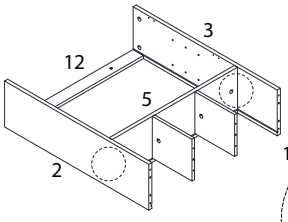

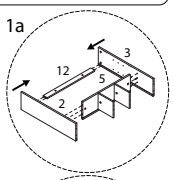

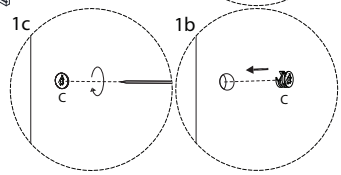

4

12	A
	
x 1	x 8

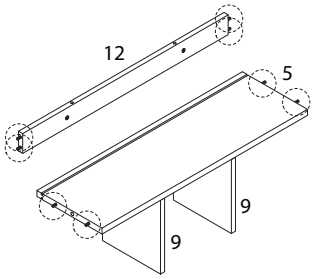

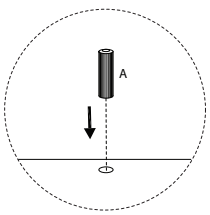

6

16	A
	
x 1	x 6

7

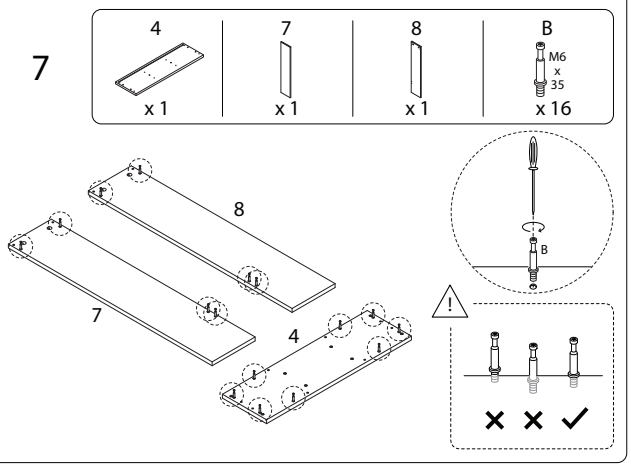

8

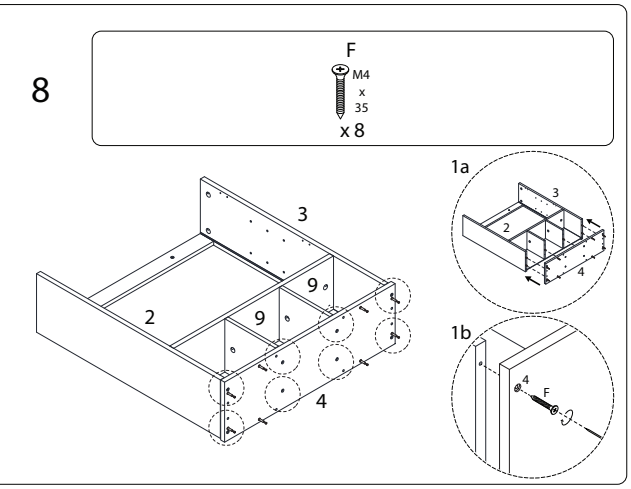

9

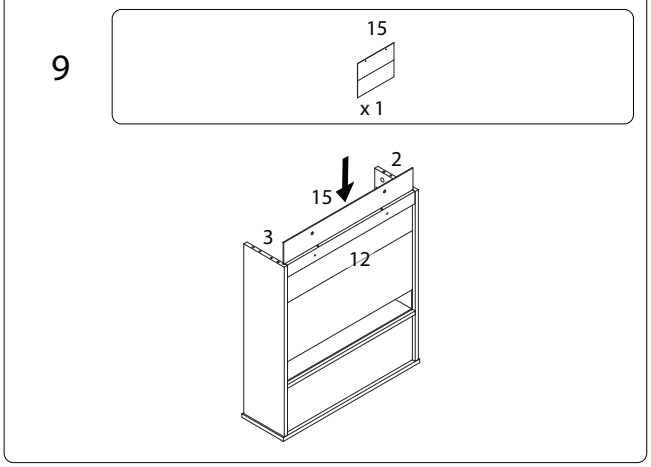

10

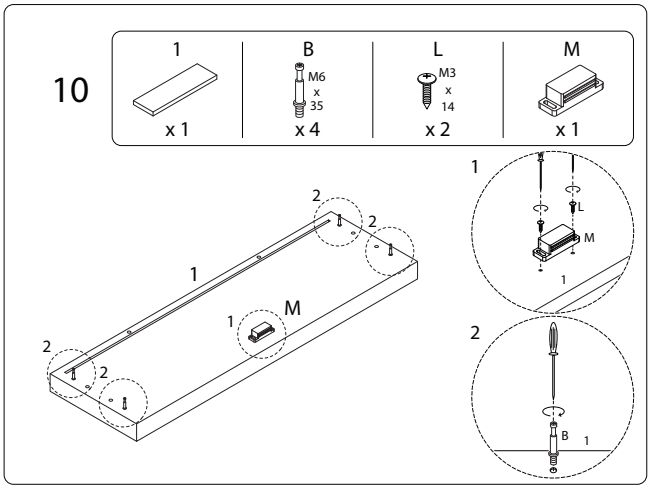

11

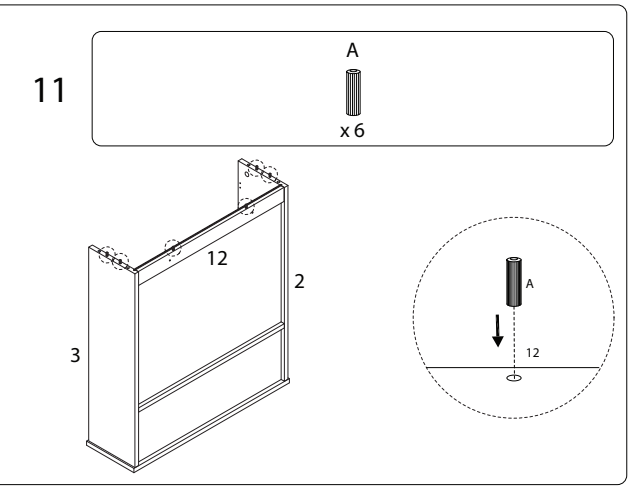

13 x 2

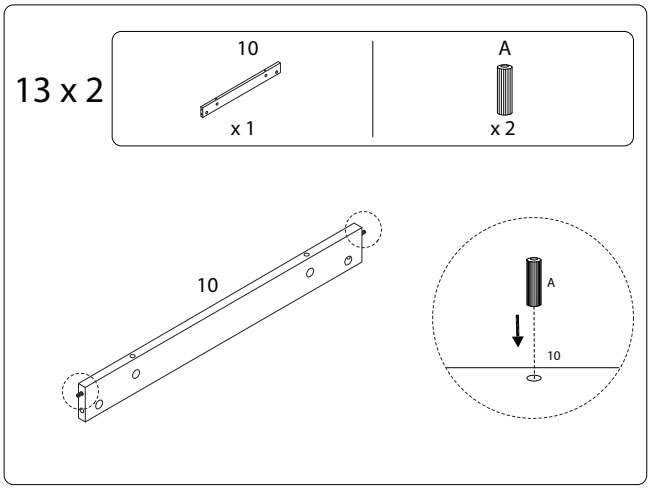

12

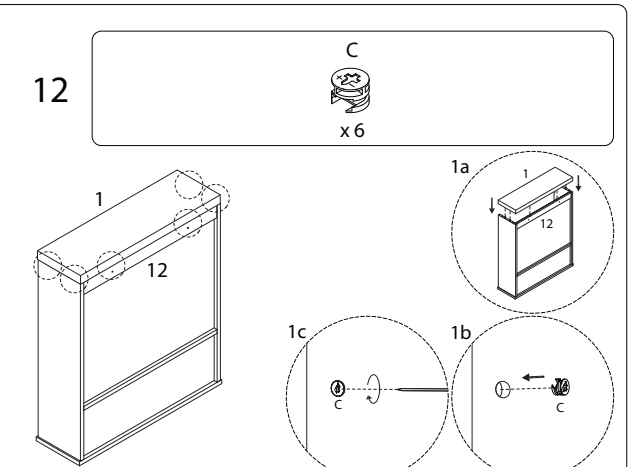

14

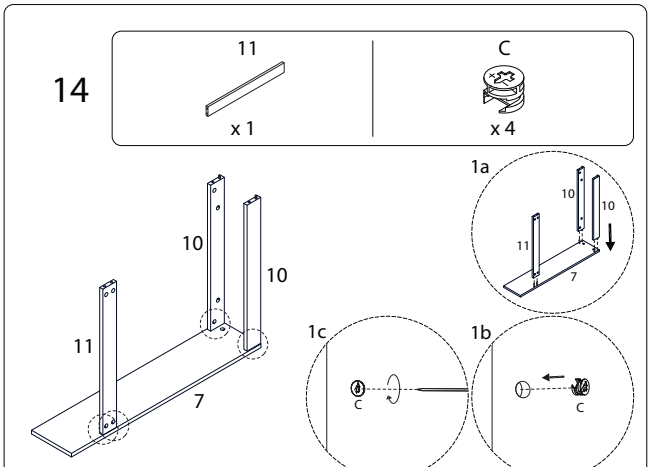

15

8 x 1

C x 4

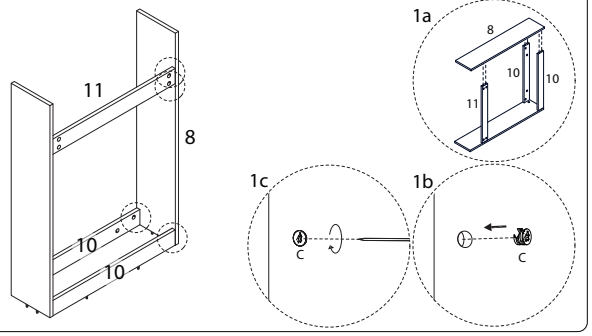

16

C x 8

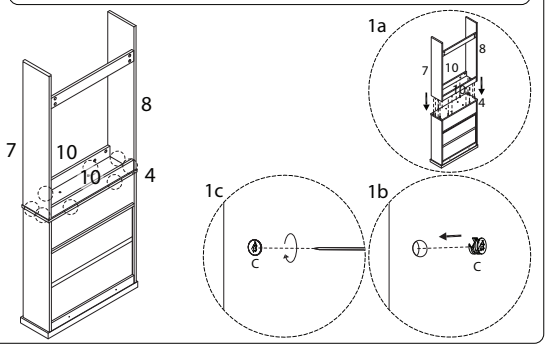

17

H1 x 8

H2 M3 x 14 x 8

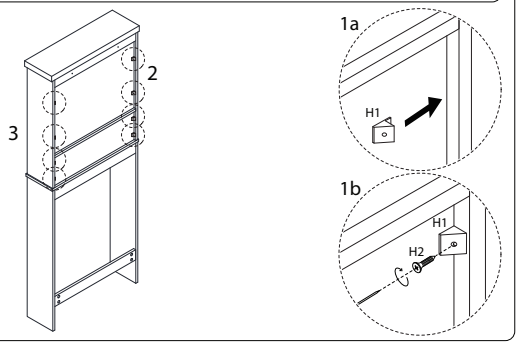

18

13 x 1

14 x 1

E M3 x 12 x 10

I x 2

J x 4

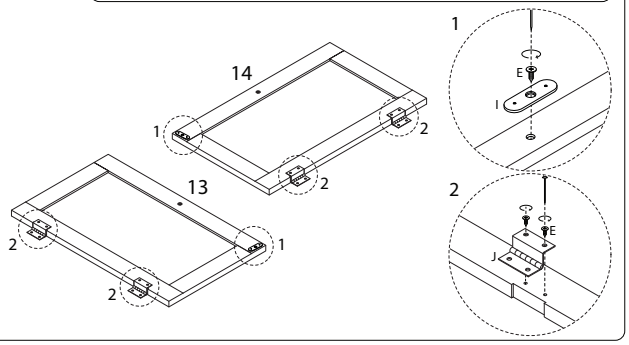

19

D x 2

G M4 x 16 x 2

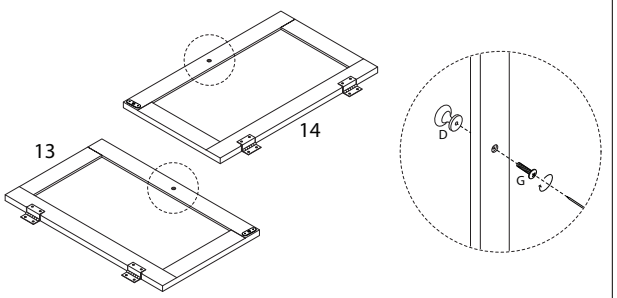

20

E M3 x 12 x 8

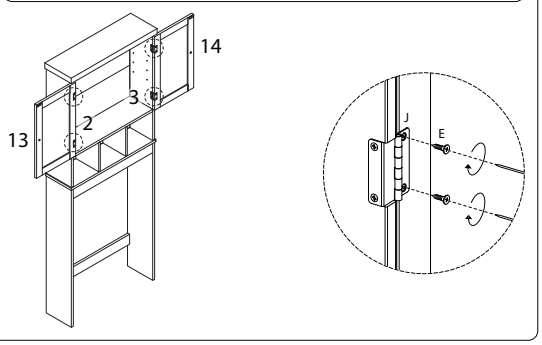

21

N1 x 2

N2 M4 x 35 x 2

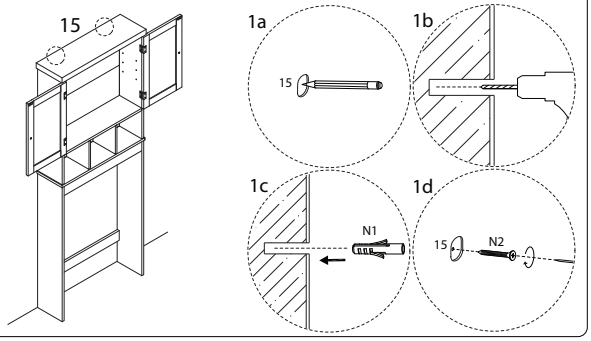

22

K x 4

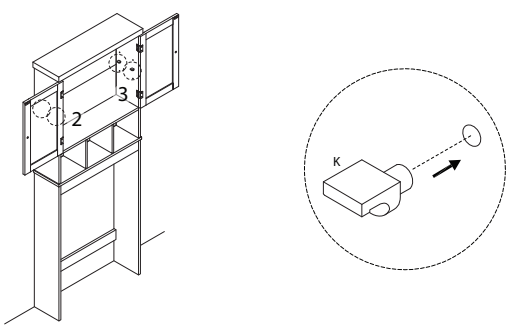

23

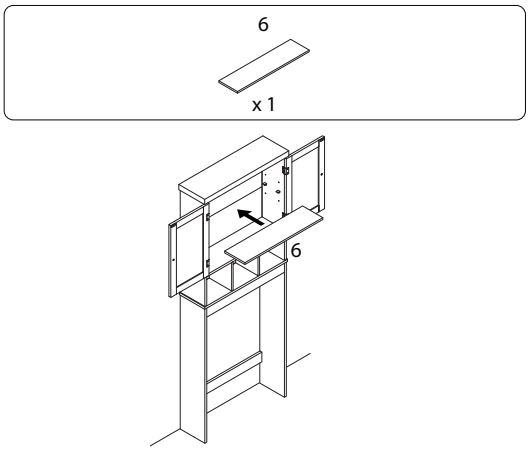

24

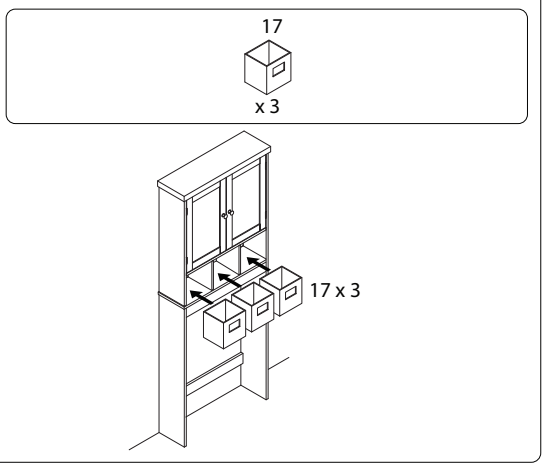

2813/PACLLON/071026/