LUGO

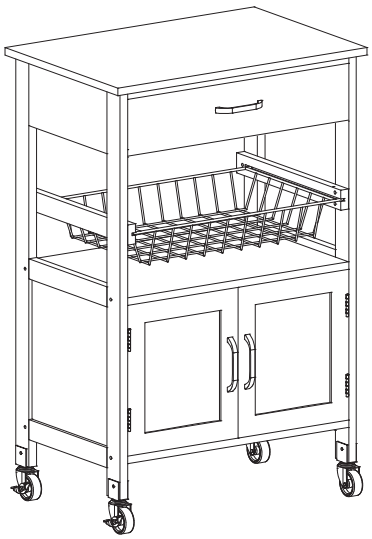

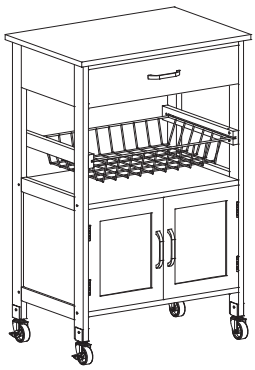

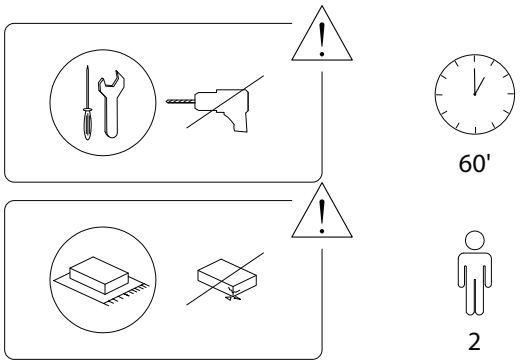

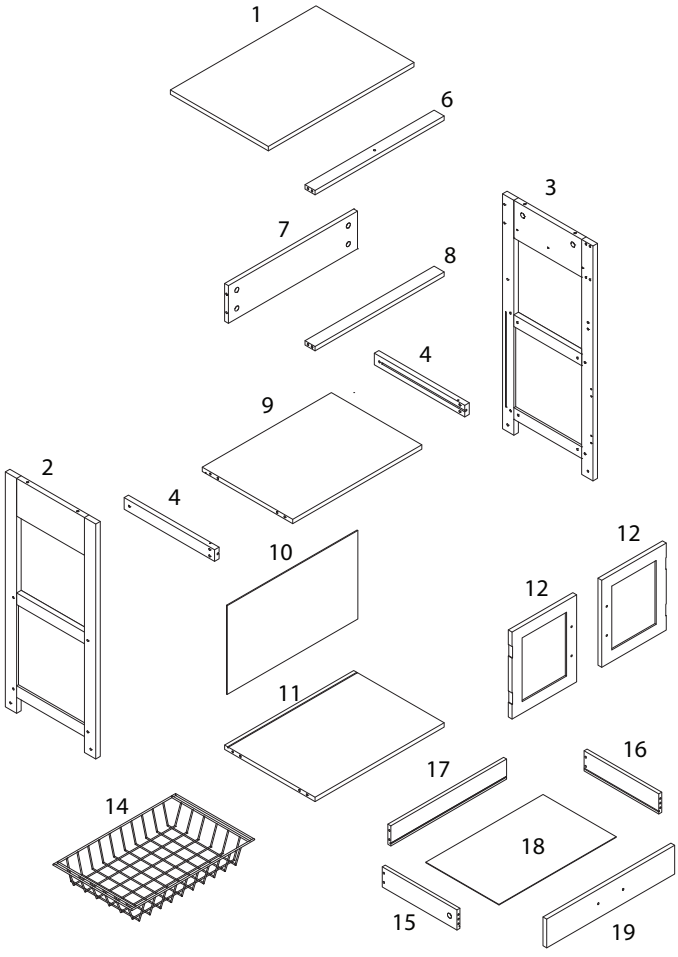

1 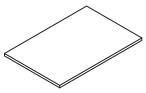 x 1	2 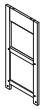 x 1	3  x 1	4 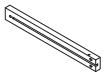 x 4
6 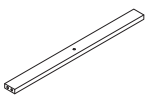 x 1	7 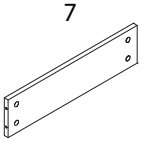 x 1	8 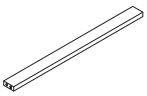 x 1	9 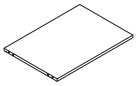 x 1
10  x 1	11 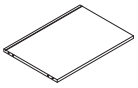 x 1	12  x 2	14  x 1
15  x 1	16  x 1	17 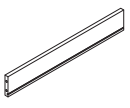 x 1	18 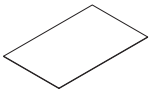 x 1
19 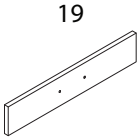 x 1			

A	B	C
x 14	x 14	x 16
D M3 x 12 x 28	E M4 x 35 x 4	F M6 x 50 x 8
G x 8	H x 1	I M3 x 14 x 6
J x 2	K x 2	L M6 x 30 x 4
M x 4	N x 4	O x 2

P	Q	R
M4 x 25 x 7	x 3	M4 x 16 x 6
S M3 x 18 x 2	T x 4	U x 4
V x 4	W x 1	YR x 1
YL x 1	ZR x 1	ZL x 1

1

2	3	4	P
x 1	x 1	x 2	M4 x 25 x 6

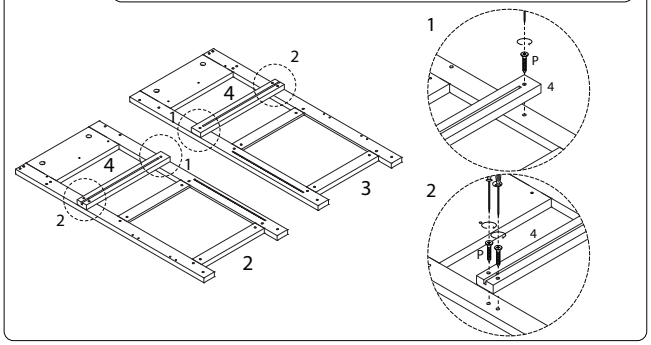

3

A
x 8

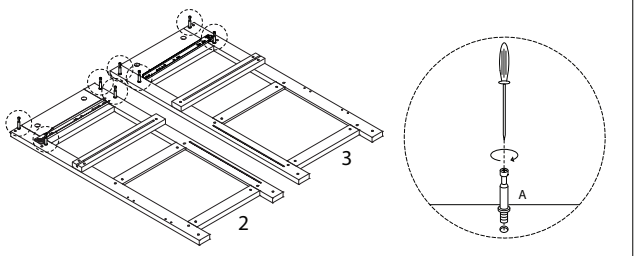

2

D	YR	YL
M3 x 12 x 6	x 1	x 1

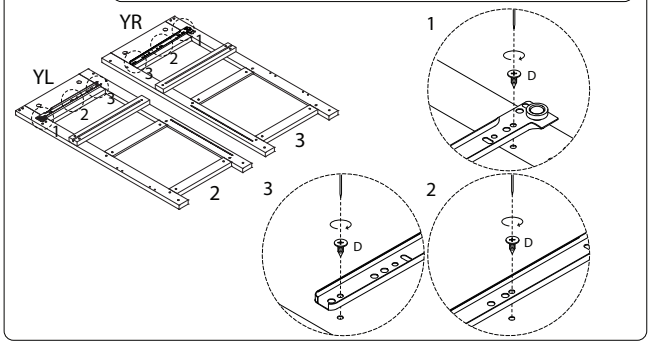

4

9	H	I
x 1	x 1	M3 x 14 x 2

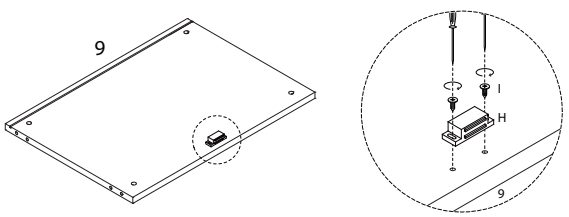

5

C
x 4

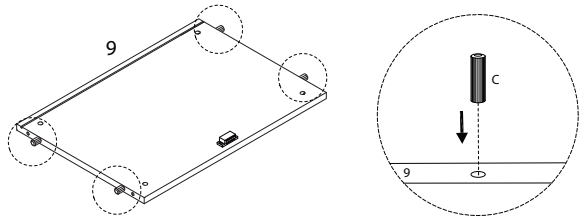

7

11
x 1

C
x 4

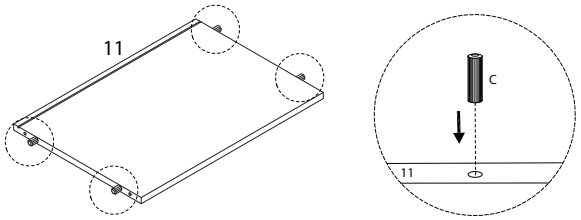

6

F
M6 x 50
x 2

G
x 2

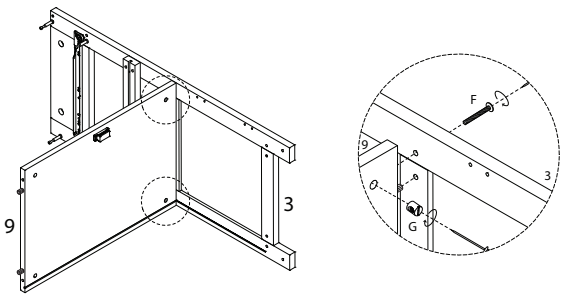

8

F
M6 x 50
x 2

G
x 2

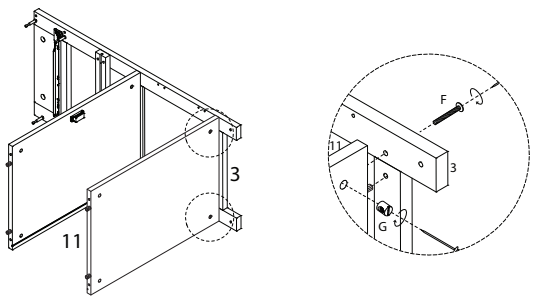

9

J
x 1

K
x 1

L
M6 x 30
x 2

M
x 2

T
x 2

U
x 2

W
x 1

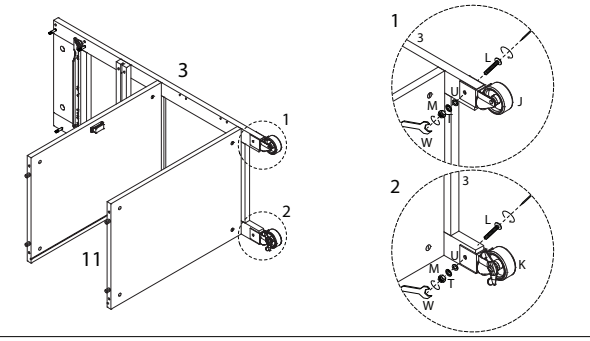

11

10
x 1

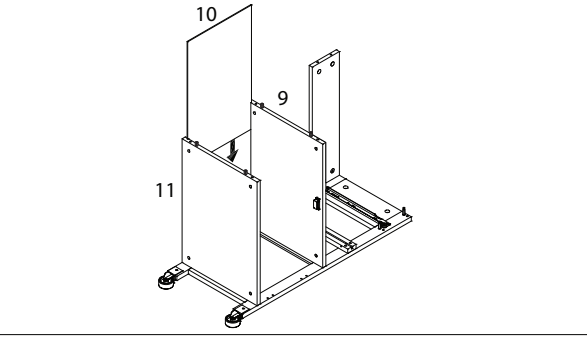

10

7
x 1

B
x 2

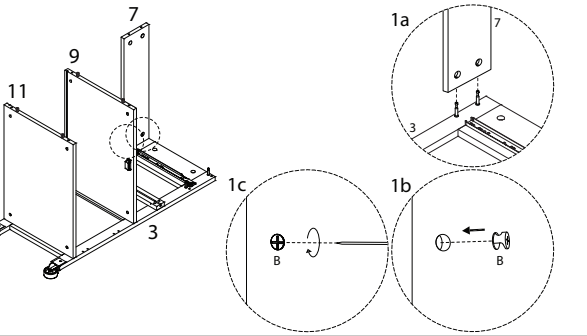

12

6
x 1

8
x 1

C
x 4

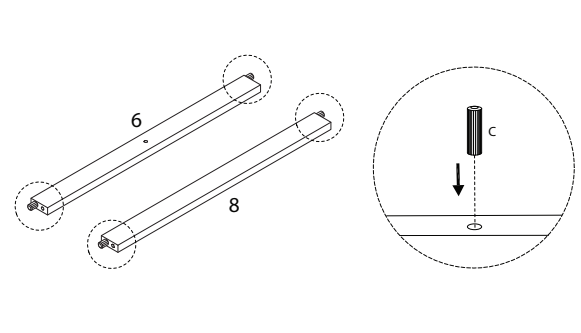

13

B

x 2

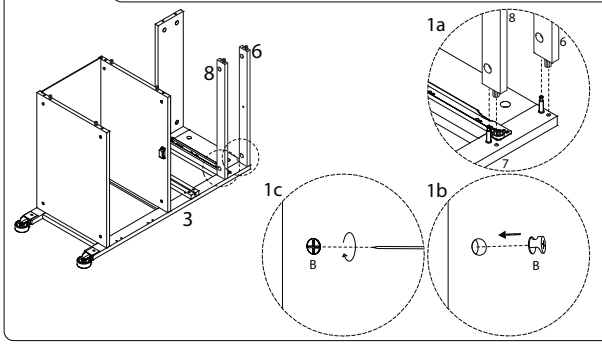

14

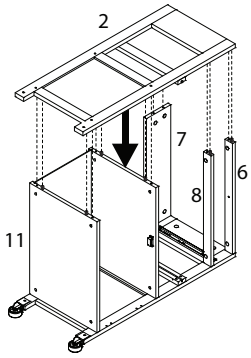

15

F

M6 x 50

x 4

G

x 4

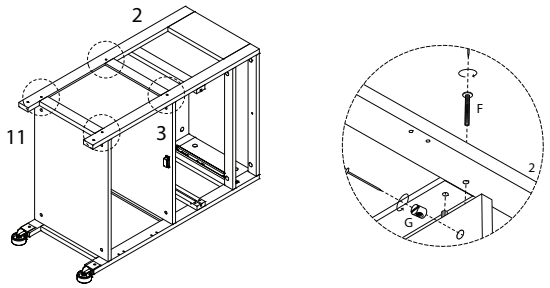

16

B

x 4

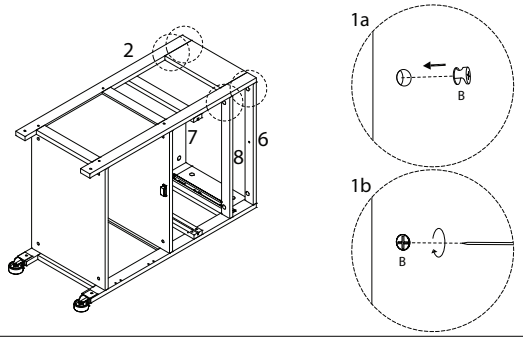

17

J x 1 | K x 1 | L M6 x 30 x 2 | M x 2 | T x 2 | U x 2 | W x 1

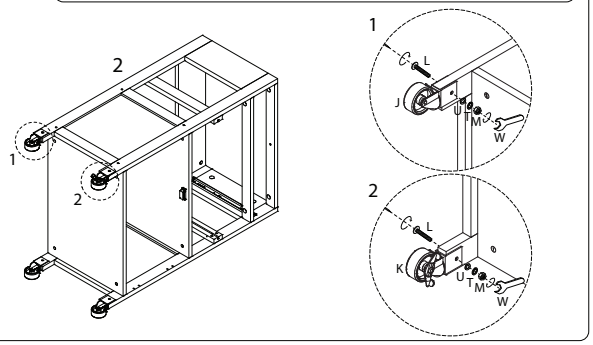

18

1

x 1

A

x 4

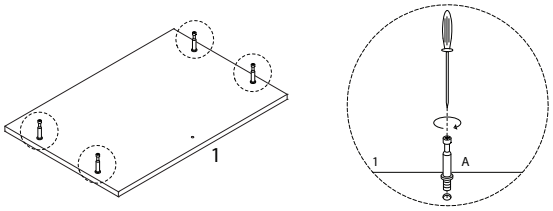

19

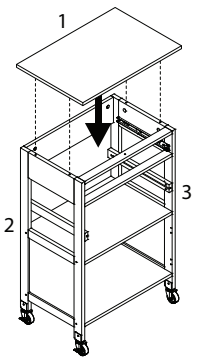

20

P

M4 x 25

x 1

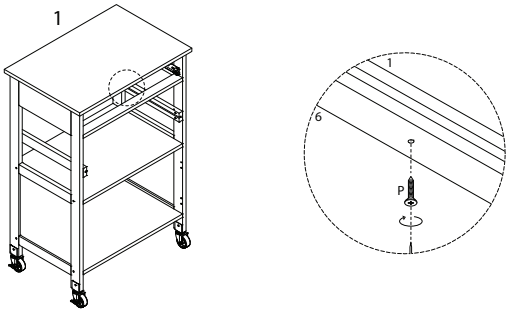

21

B

x 4

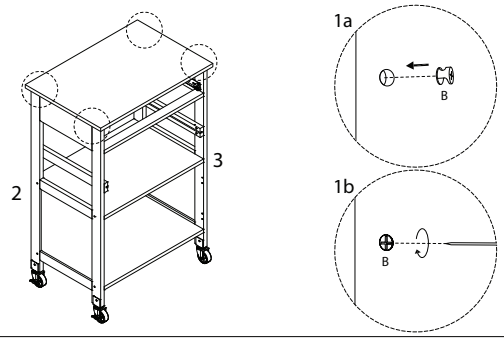

22 x 2

12	D	N	O
x 1	x 5	x 2	x 1

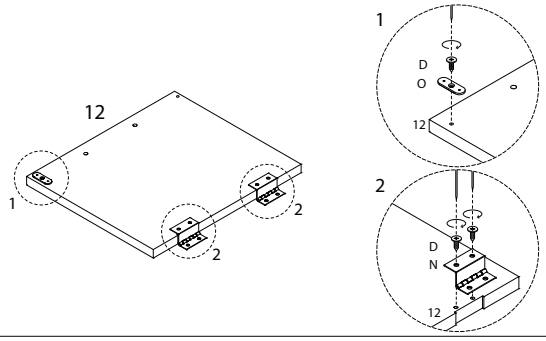

23

D

M3 x 12

x 8

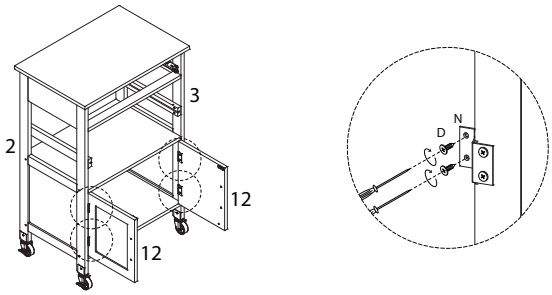

24

Q	R
x 2	x 4

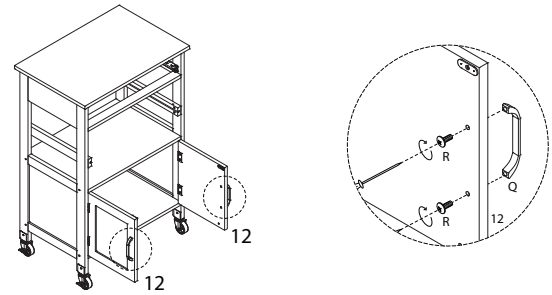

25

19	A	C
x 1	x 2	x 4

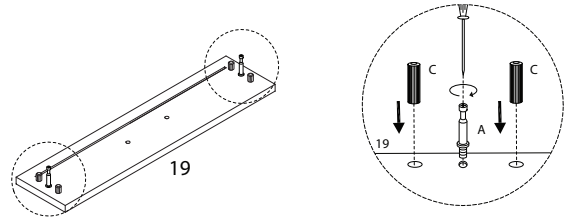

26

15	16	B
x 1	x 1	x 2

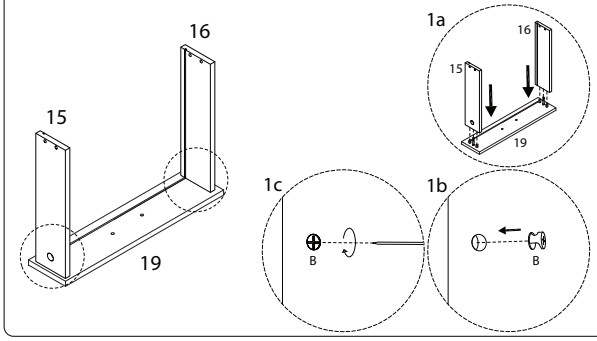

27

18

x 1

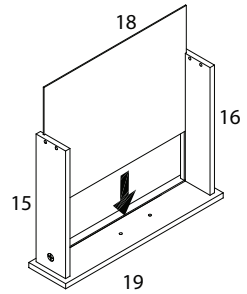

28

17	E
x 1	x 4

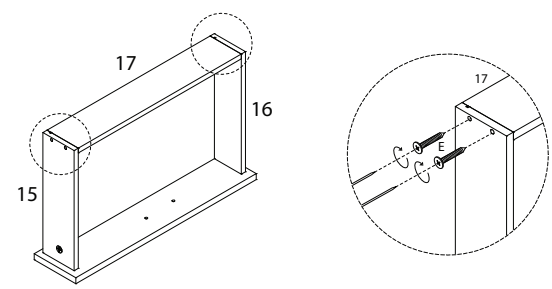

29

D	ZR	ZL
M3 x 12		
x 4	x 1	x 1

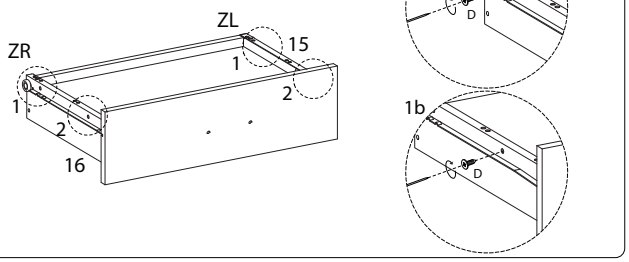

30

Q	R
	M4 x 16
x 1	x 2

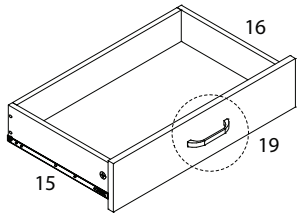

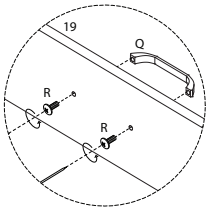

31

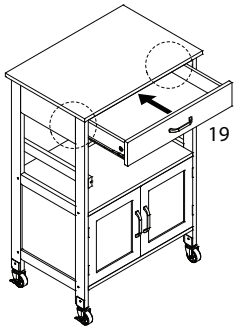

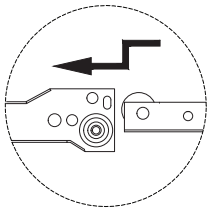

32

I	V
M3 x 14	
x 4	x 4

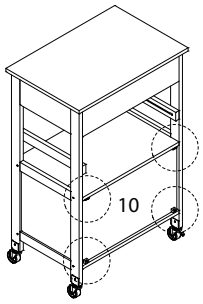

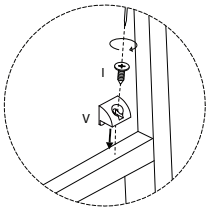

33

14
x 1

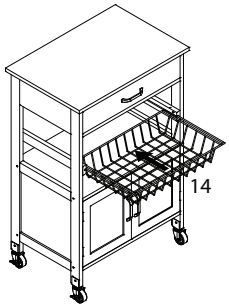

34

S
M3 x 18
x 2

