KIVVIK

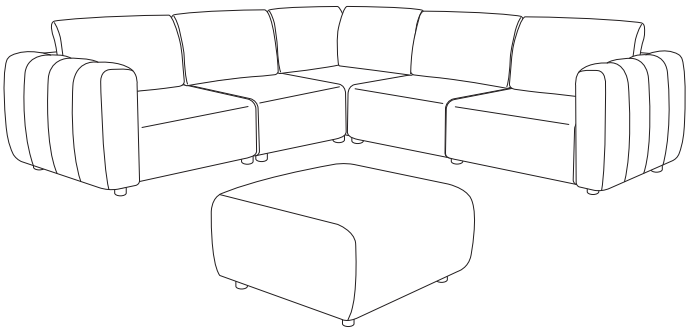

1/18

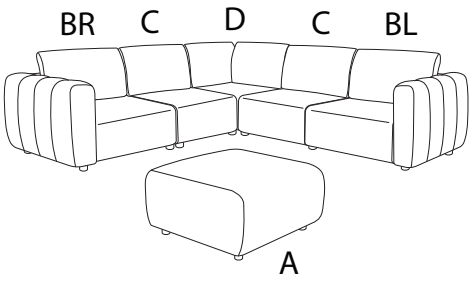

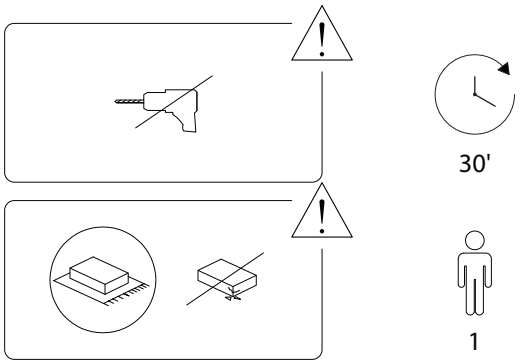

2/18

2650/KIVVIK/240226/

A

1

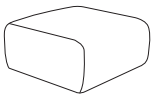

x 1

1

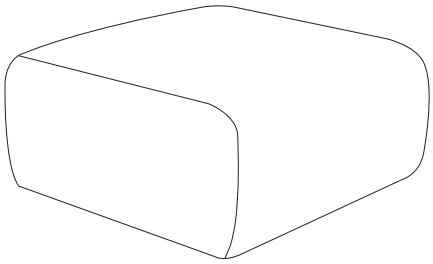



A x 4

A



x 4

3/18

2650/KIVVIK/240226/

!

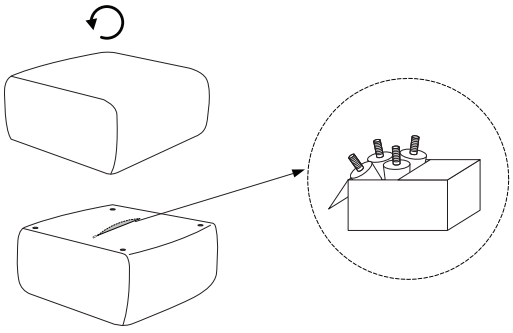

!

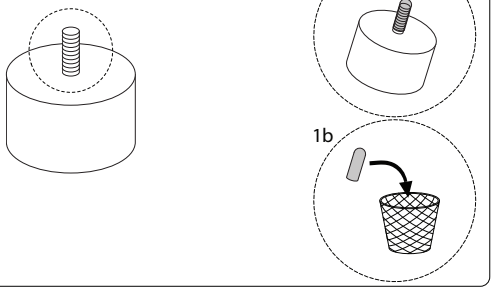

4/18

2650/KIVVIK/240226/

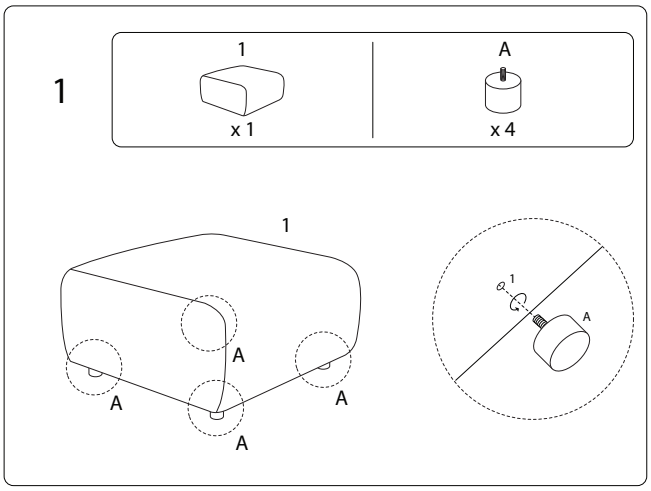
1
1
x 1
A
x 4
1
A
A
A
A
1
A

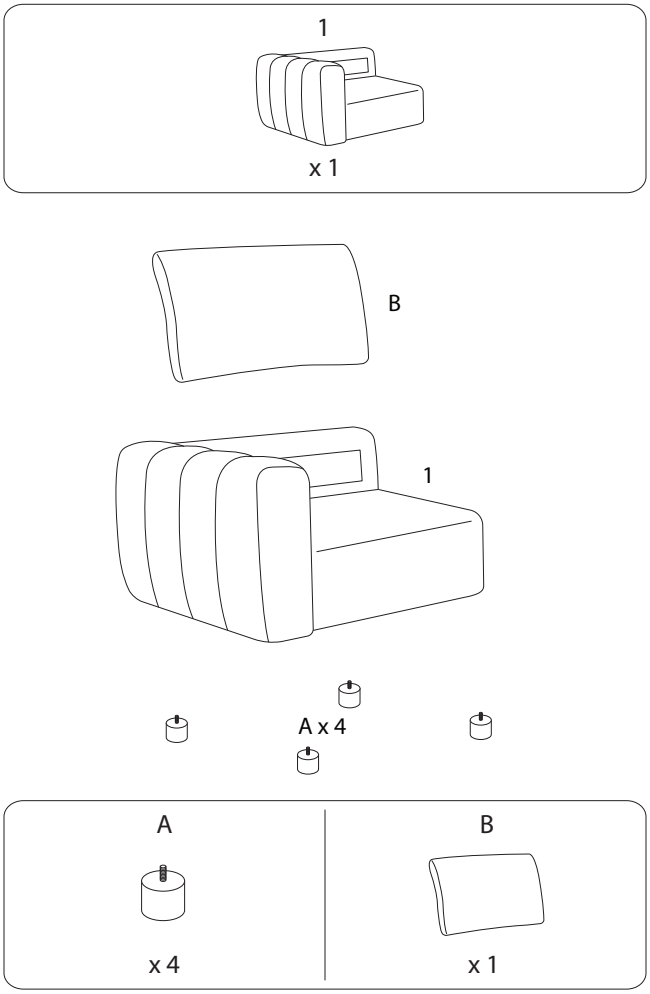
1
x 1
B
1
A x 4
A
x 4
B
x 1

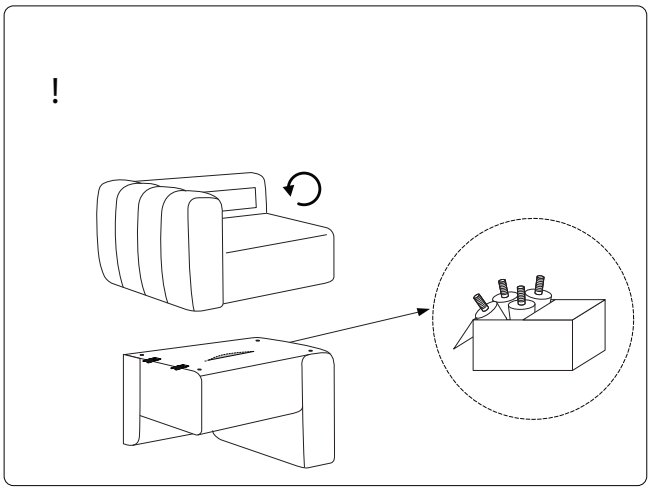
!

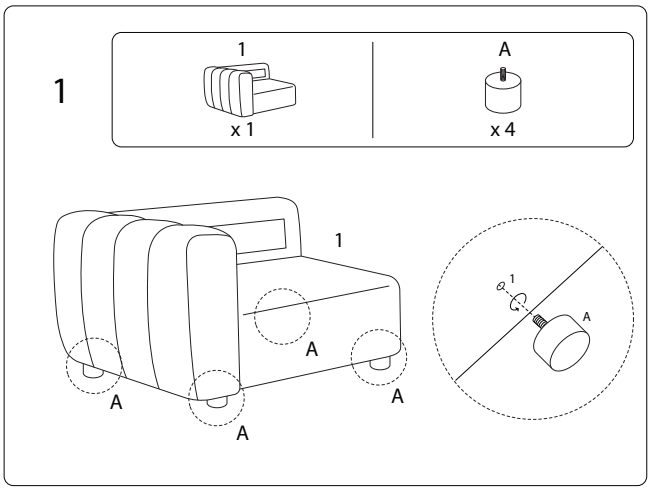
1
1
x 1
A
x 4
1
A
A
A
A
1
A

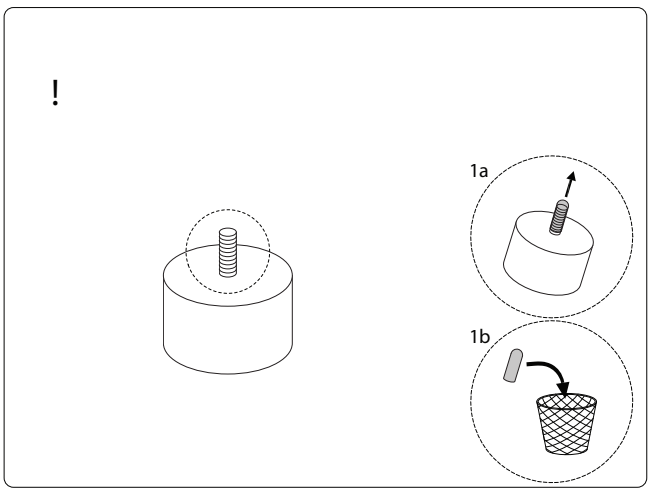
!
1a
1b

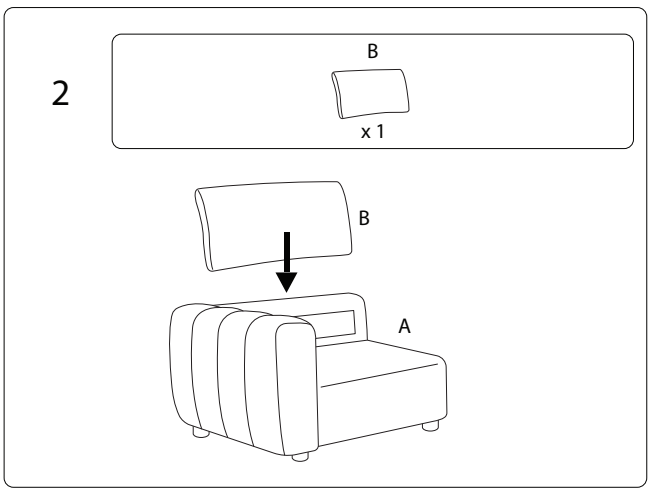
2
B
x 1
B
A

BL

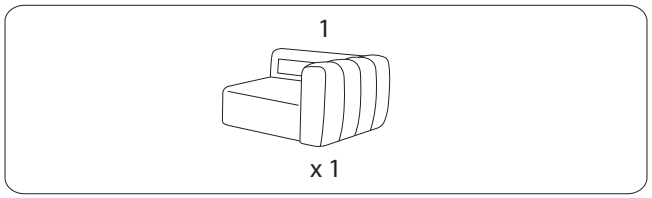
1
x 1

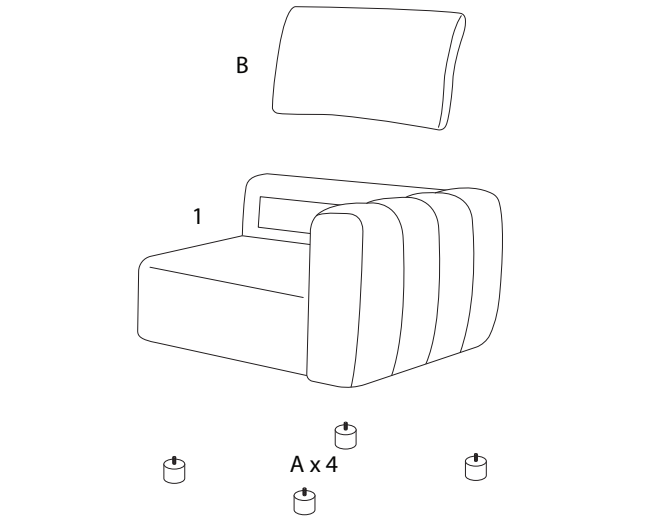
B
1
A x 4

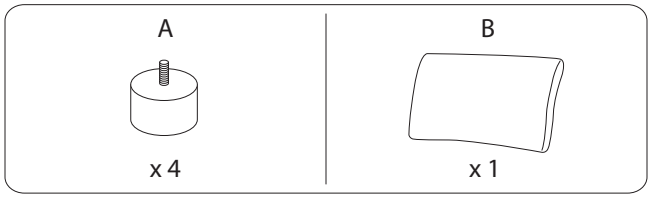
A
x 4
B
x 1

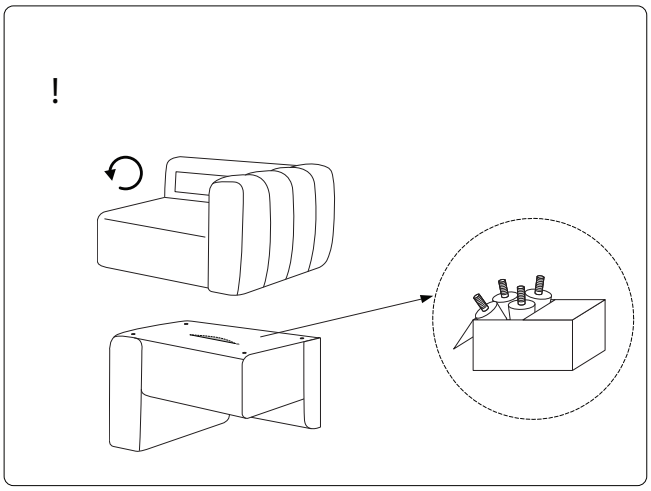
!

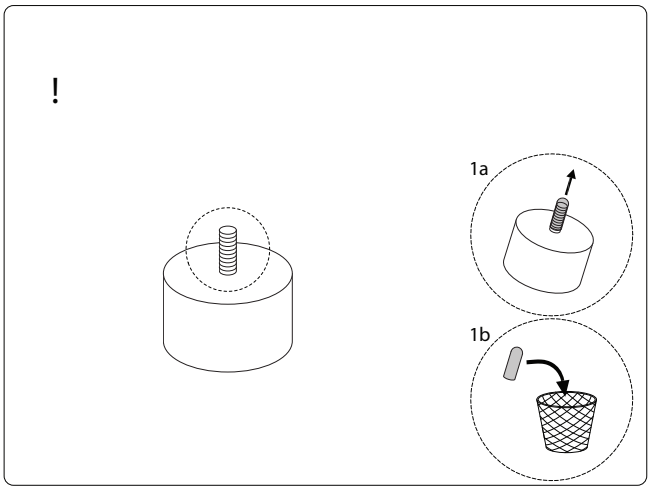
!
1a
1b

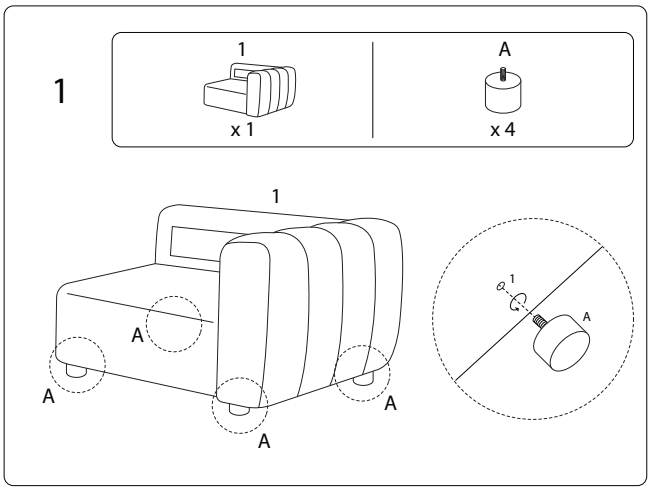
1
1
x 1
A
x 4
1
A
A
A
A

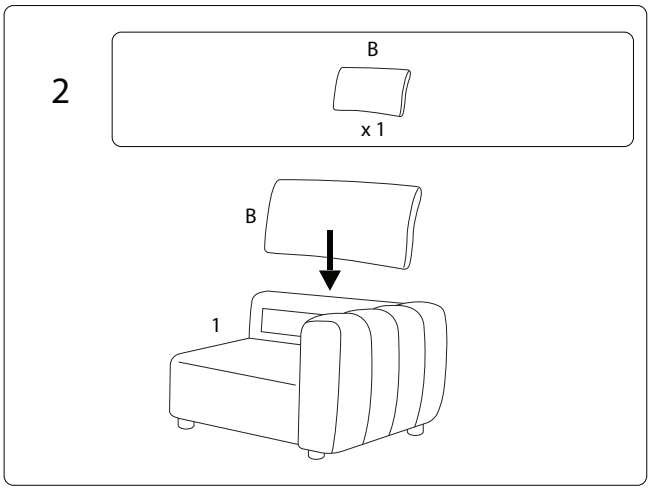
2
B
x 1
B
1

C x 2

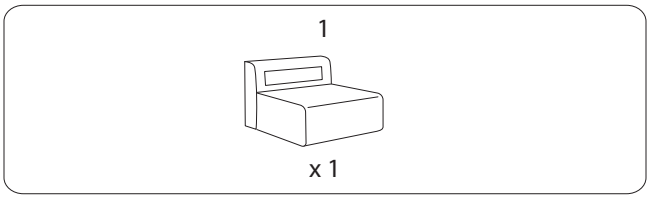
1
x 1

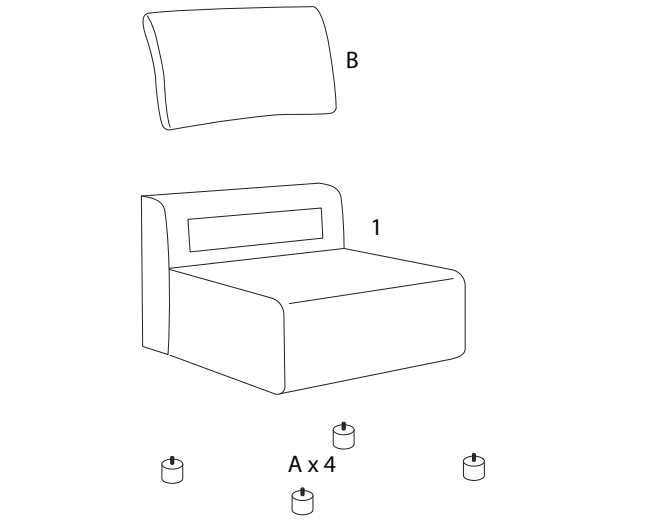
B
1
A x 4

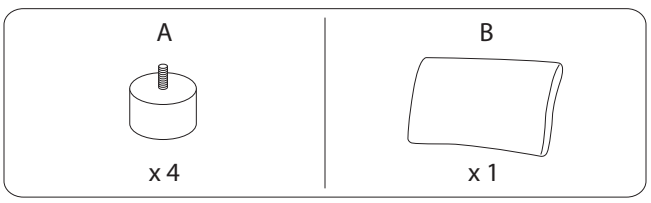
A
x 4
B
x 1

!

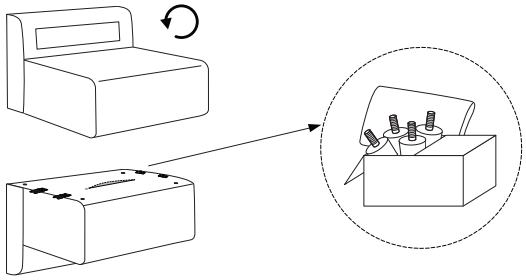

1

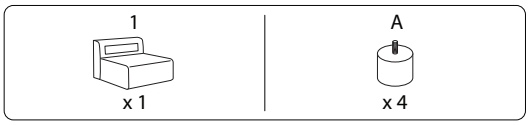

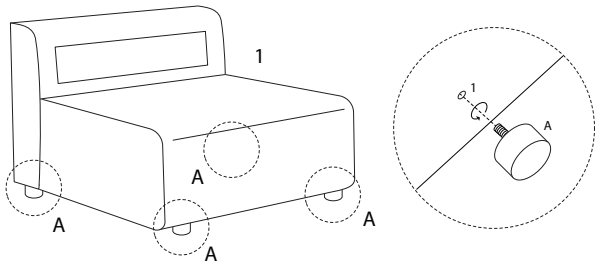

!

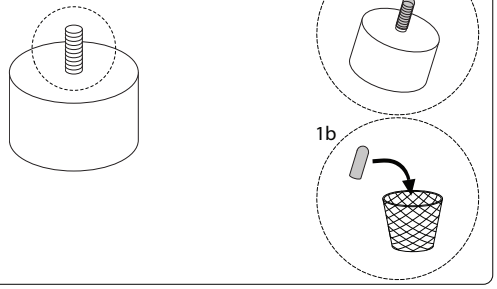

2

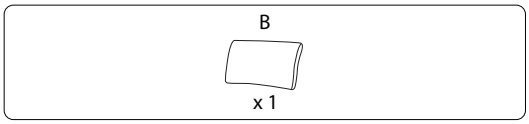

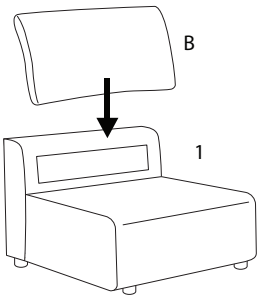

D

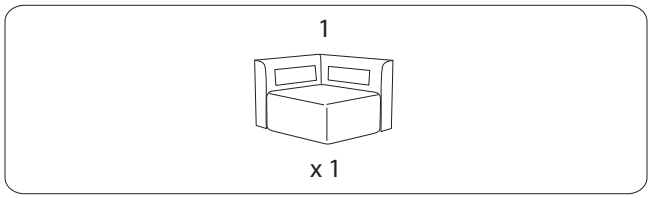

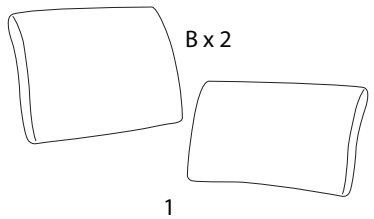

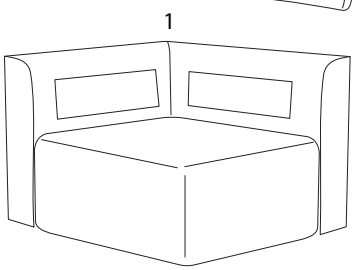

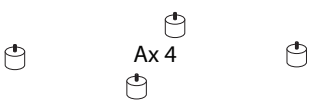

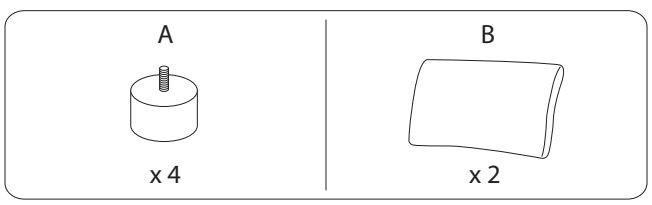

!

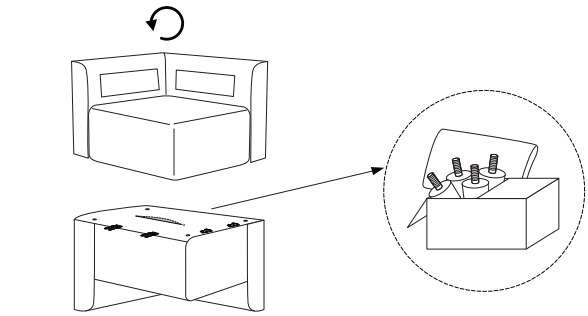

!

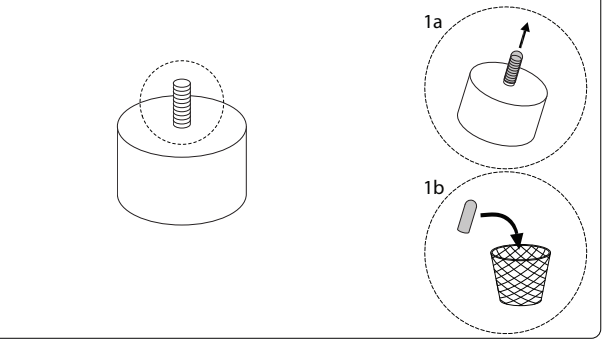

1

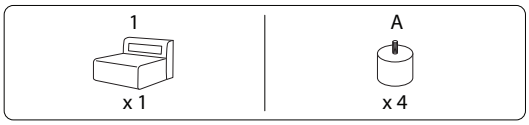

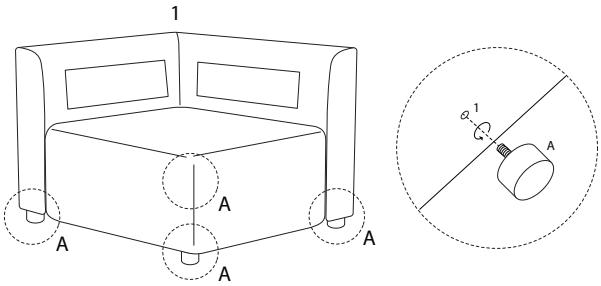

2

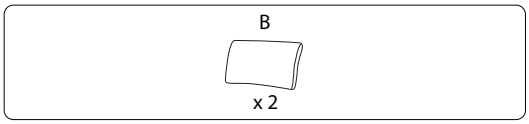

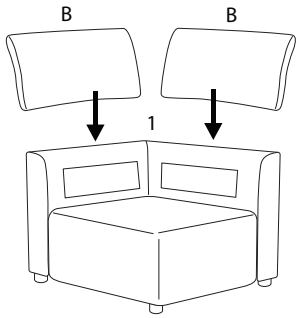

!

