FUTALEUFU

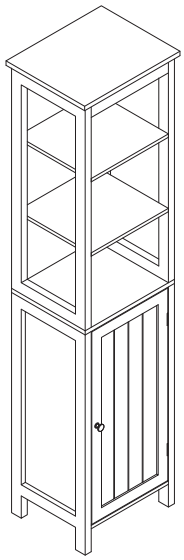

1/14

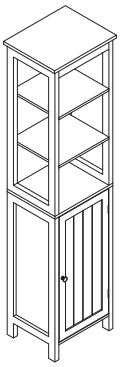

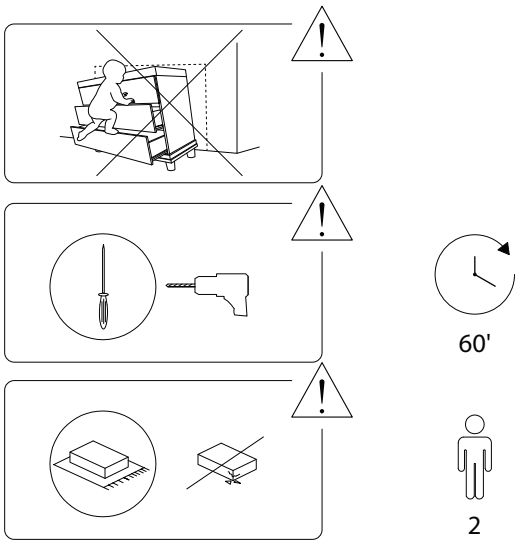

2/14

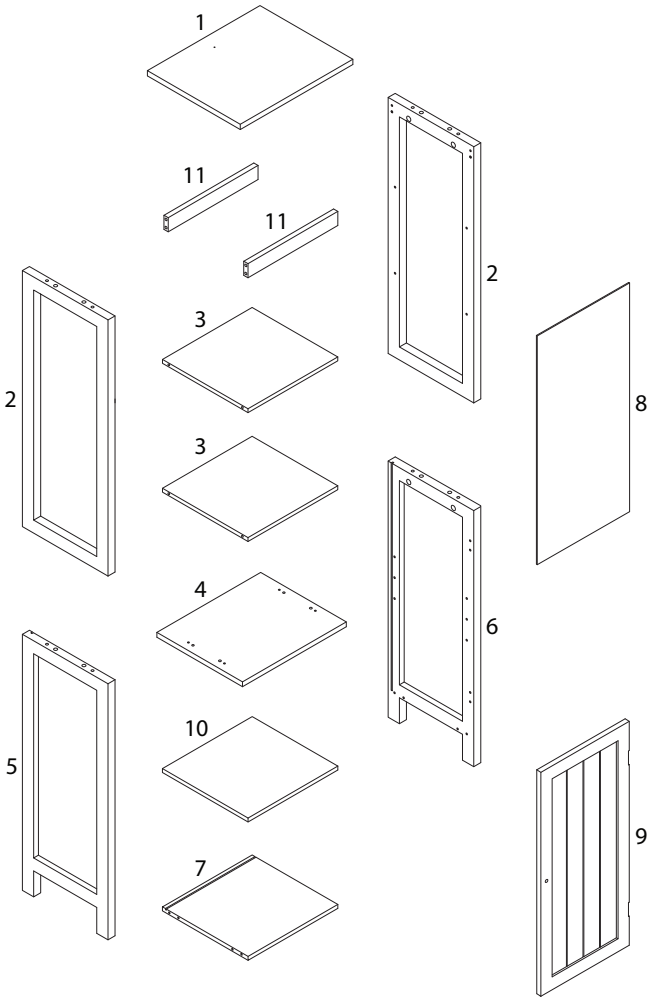

3/14

1 x 1		2 x 2
3 x 2	4 x 1	5 x 1
6 x 1	7 x 1	8 x 1
9 x 1	10 x 1	11 x 2
A x 20	B x 20	C M6 x 30 x 16

4/14

D	E	F
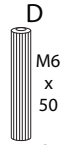 M6 x 50	 M4 x 35	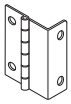
x 4	x 4	x 2
G	**H**	**I**
 M3 x 12		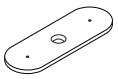
x 9	x 1	x 1
J	**K**	**L**
 M3 x 14		
x 6	x 4	x 4
M	**N**	**O**
	 M4 x 16	
x 1	x 1	x 1
P	**Q**	**R**
 M4 x 12	 M4 x 35	
x 1	x 1	x 1

1

1	2	4	5	6	A
x 1	x 1	x 1	x 1	x 1	x 20

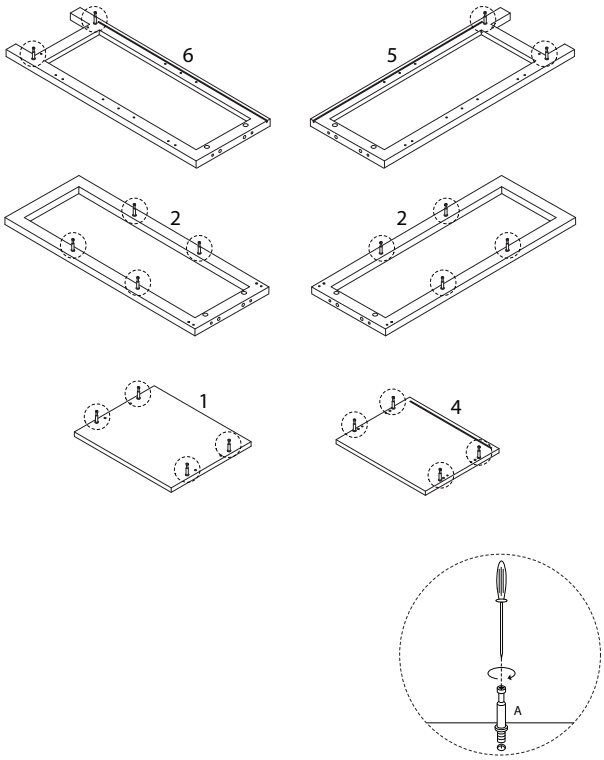

2

H	J
x 1	M3 x 14 x 2

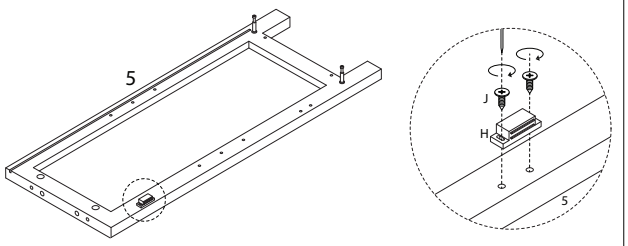

4

3	B
x 2	x 8

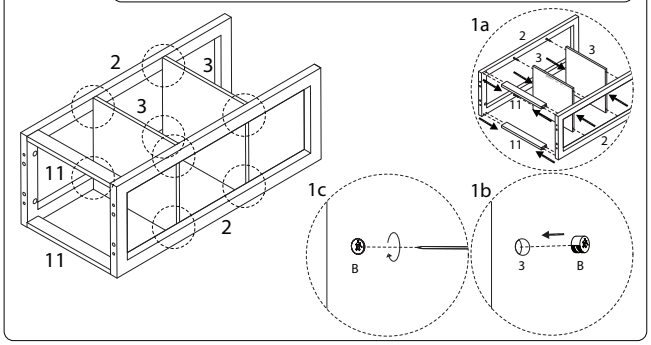

3

7	11	C
x 1	x 2	M6 x 30 x 12

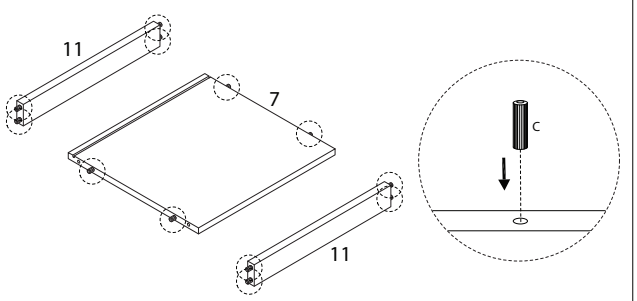

5

C	D
M6 x 30 x 4	M6 x 50 x 4

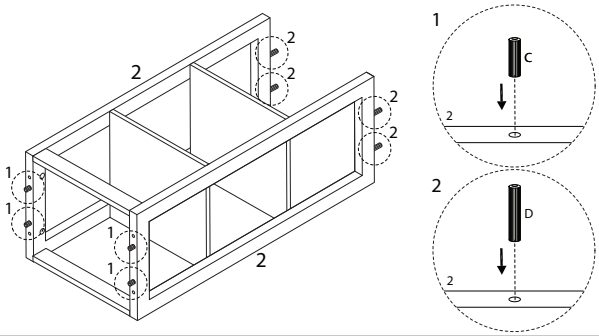

6

B

x 4

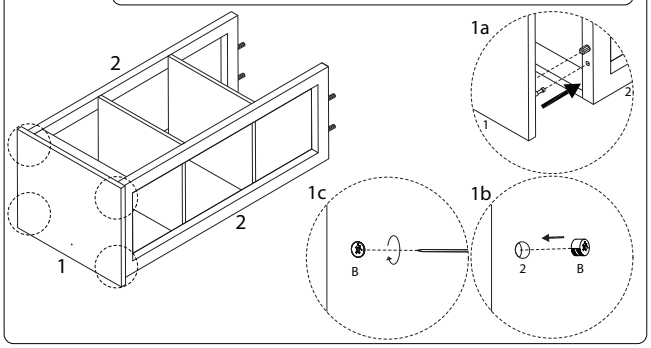

8

B

x 4

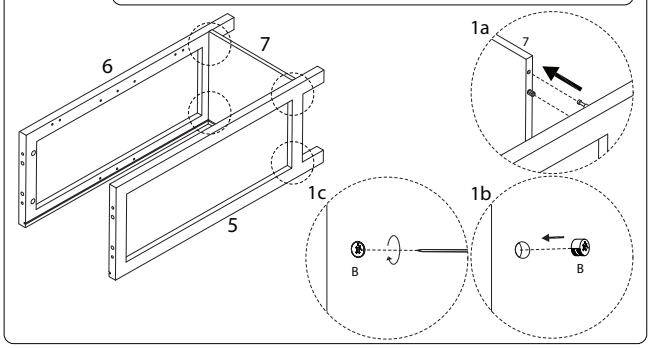

7

E

M4 x 35

x 4

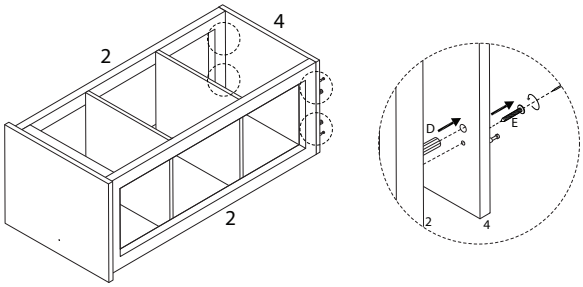

9

8

x 1

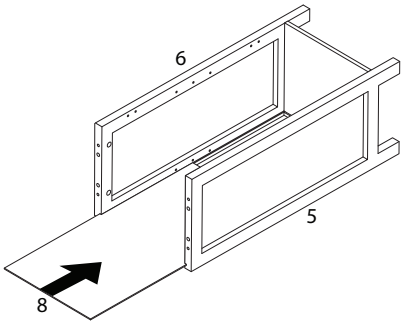

2319/FUTALEUFU/021026/

2319/FUTALEUFU/021026/

10

B

x 4

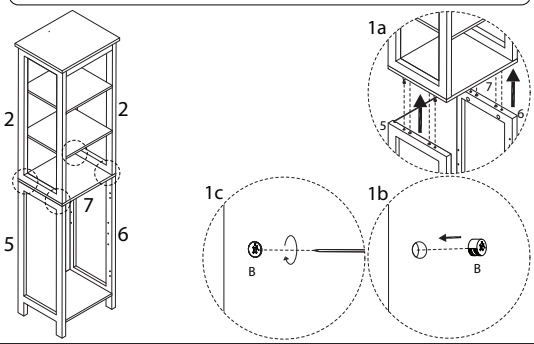

12

L

x 4

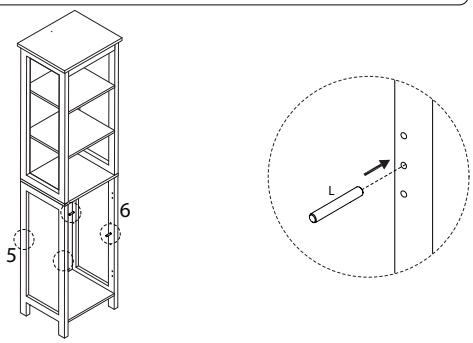

11

J

M3 x 14

x 4

K

x 4

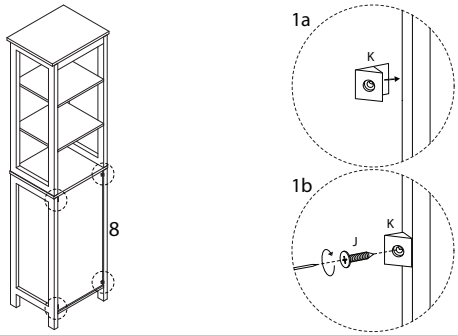

13

10

x 1

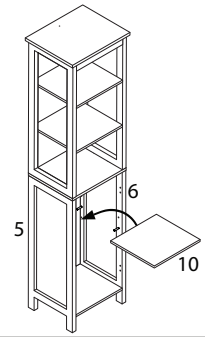

2319/FUTALEUFU/021026/

2319/FUTALEUFU/021026/

14

9	F	G	I	M	N
x 1	x 2	x 5	x 1	x 1	x 1

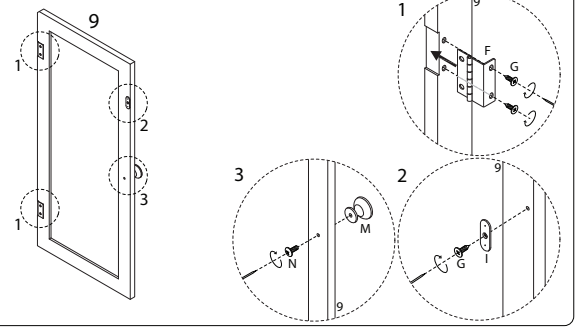

15

G
M3 x 12
x 4

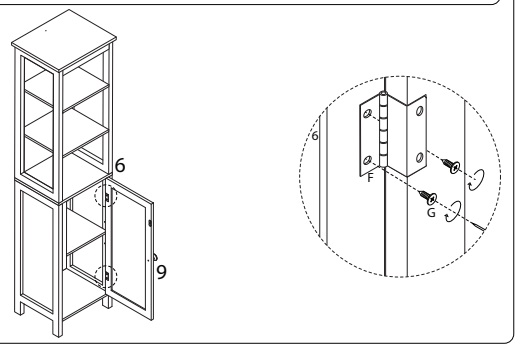

2319/FUTALEUFU/021026/

16

O	P	Q	R
x 1	x 1	x 1	x 1

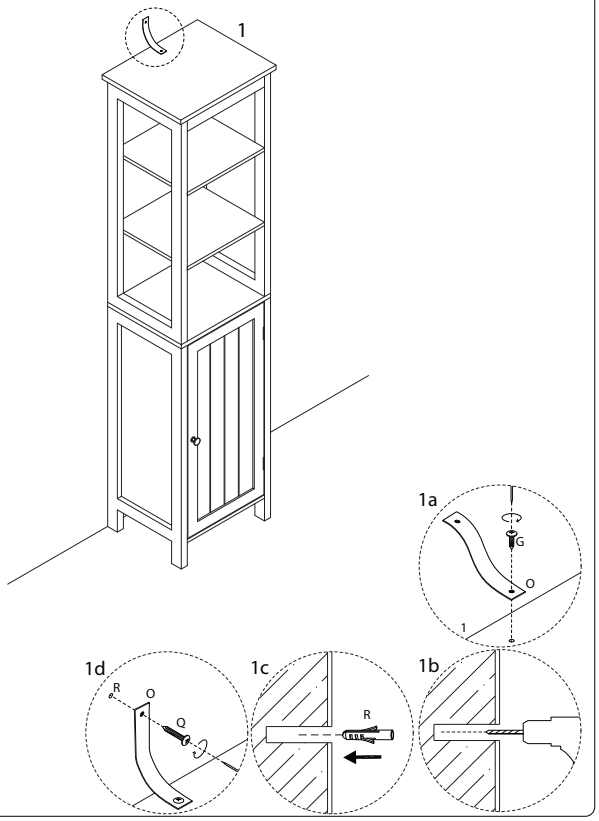

2319/FUTALEUFU/021026/