NATAL

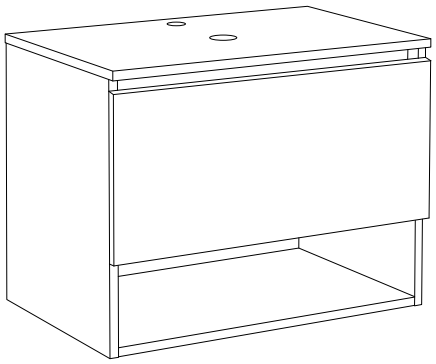

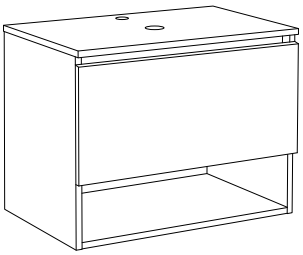

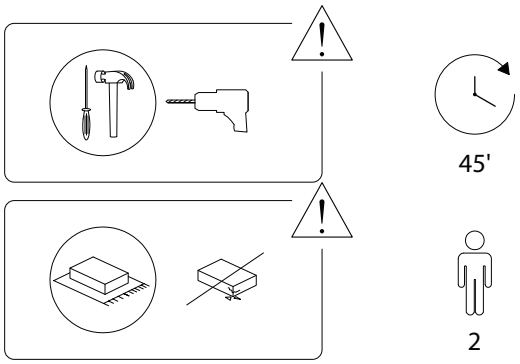

1	2	3	4
x 1	x 1	x 1	x 1

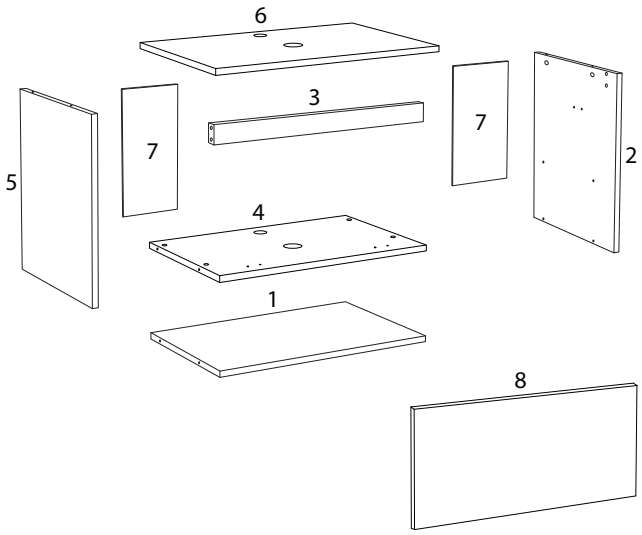

5	6	7	8
x 1	x 1	x 2	x 1

A	B	C
M3.5 x 14		M5 x 50
x 18	x 4	x 2
D	**E**	**F**
x 20	x 12	x 12
G	**H**	**I**
x 8	x 2	x 2
J	**K_1**	**K_2**
x 1	x 2	x 2

!

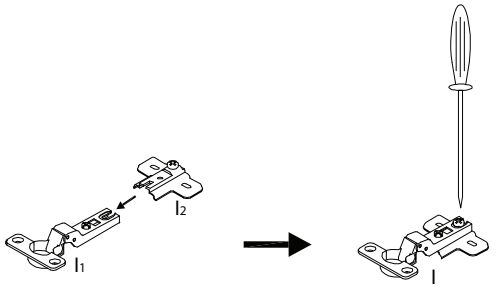

2

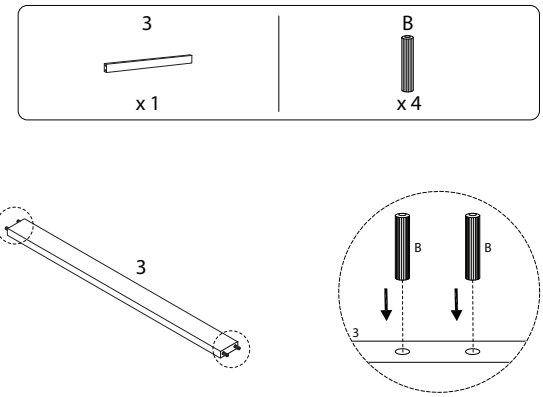

1

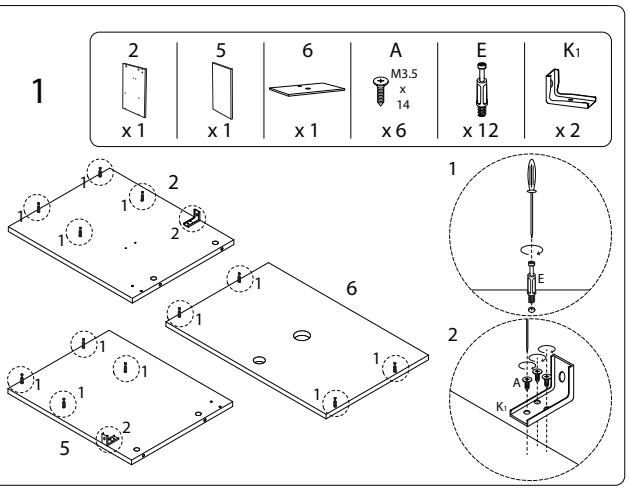

3

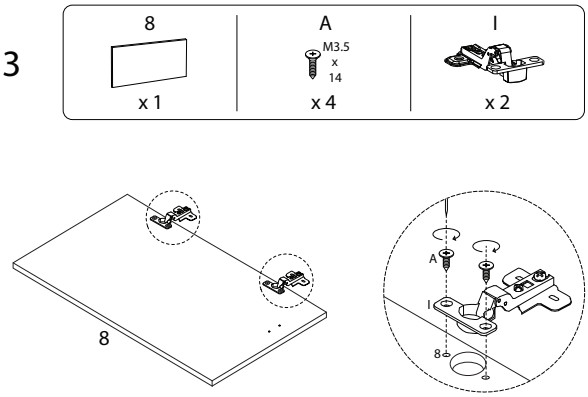

2364/NATAL/150525/

2364/NATAL/150525/

4

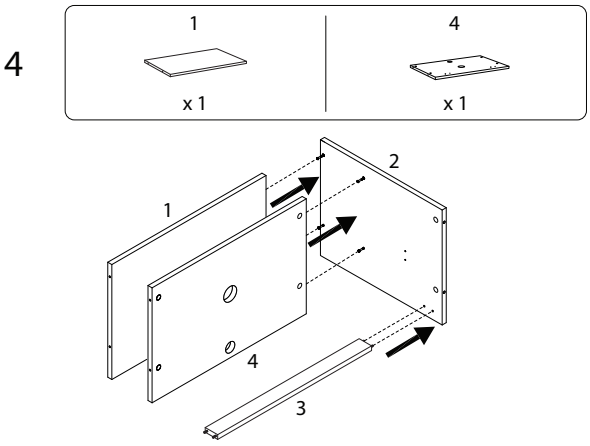

6

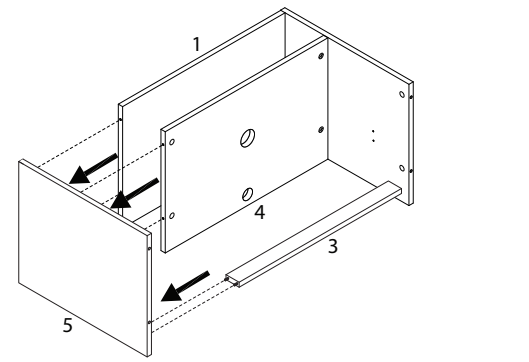

5

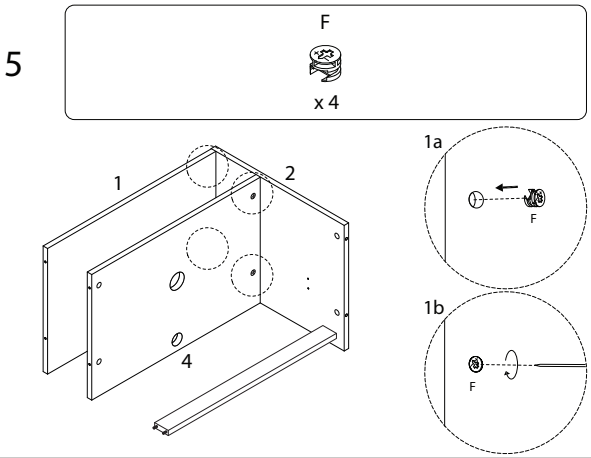

7

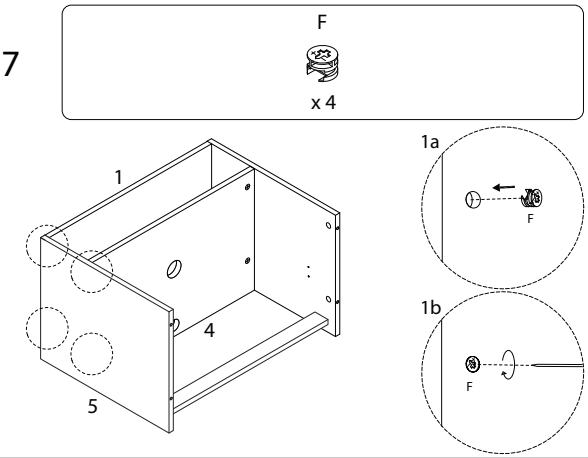

2364/NATAL/150525/

2364/NATAL/150525/

8

F

x 4

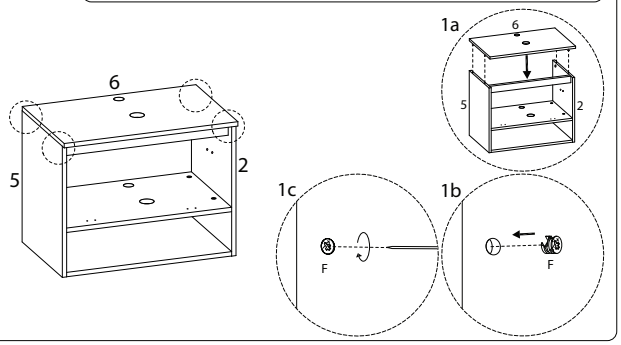

9

G

x 8

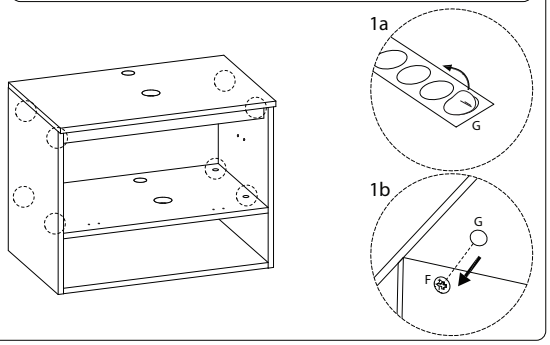

10

A

M3.5 x 14

x 4

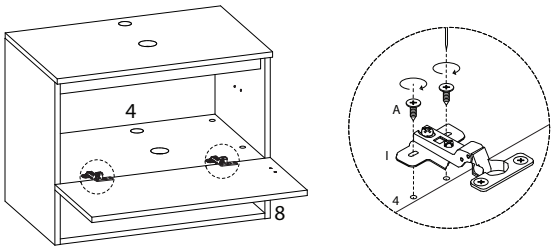

11

A

M3.5 x 14

x 4

J

x 1

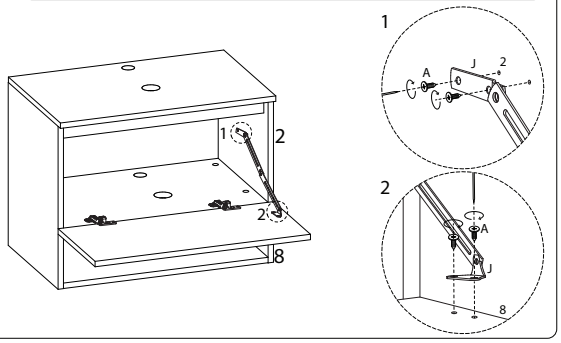

!

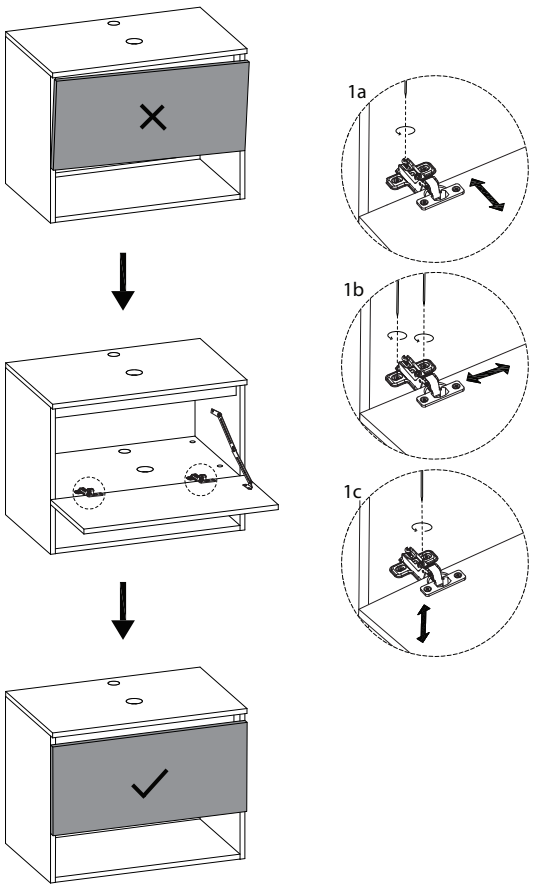

12

7

x 2

D

x 20

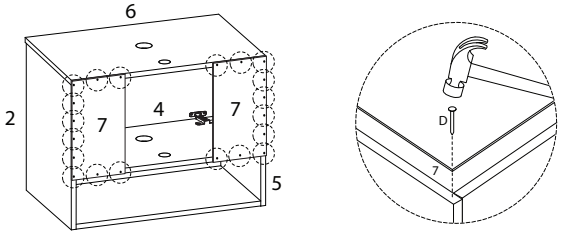

13

C

M5 x 50

x 2

H

x 2

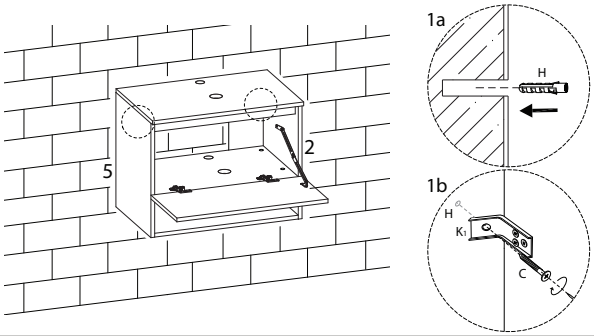

14

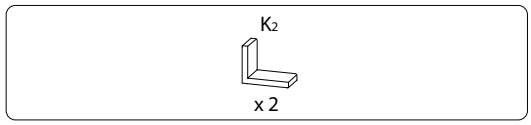

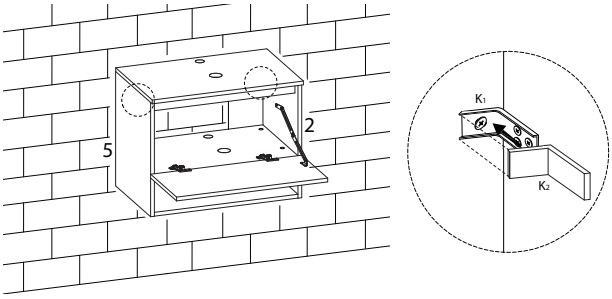

2364/NATAL/150525/