LAGOA

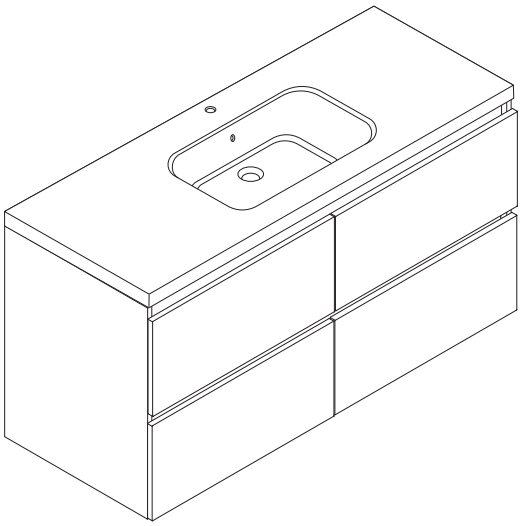

1/24

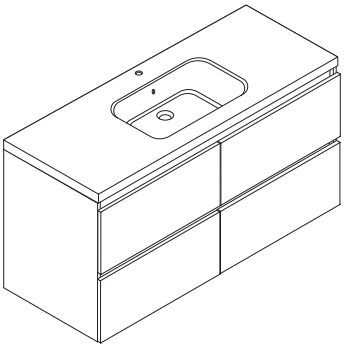

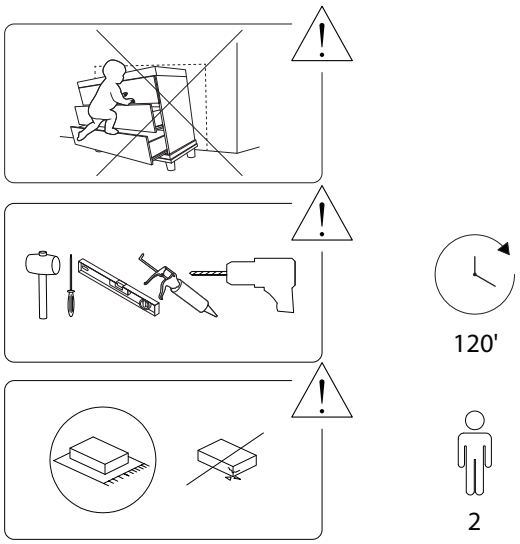

2/24

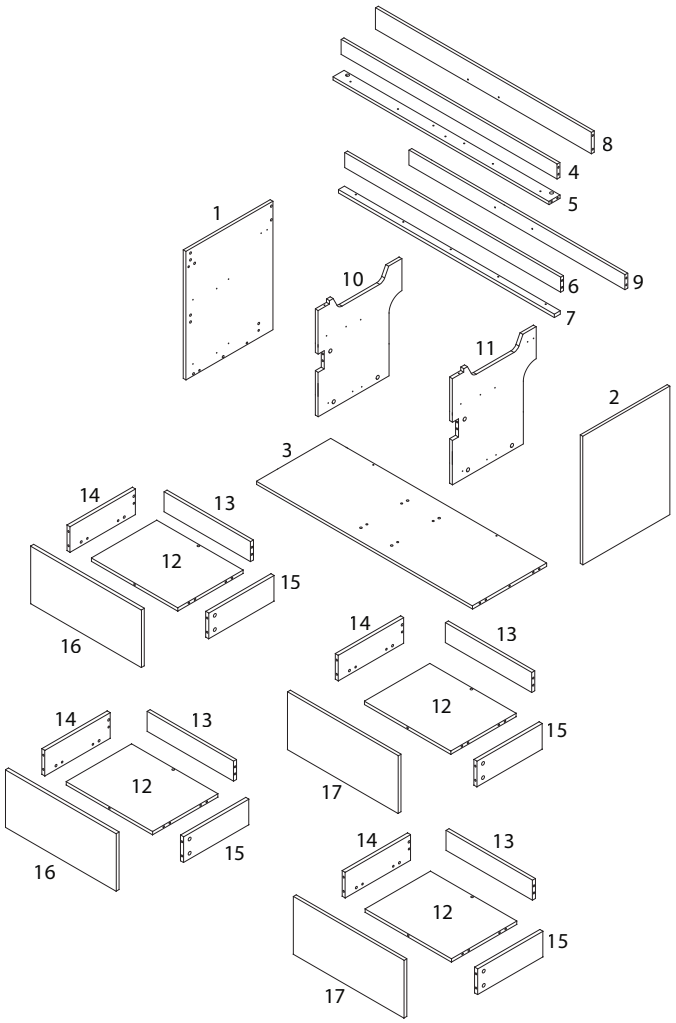

3/24

1 x 1	2 x 1	3 x 1	
4 x 1	5 x 1	6 x 1	
7 x 1	8 x 1	9 x 1	
10 x 1	11 x 1	12 x 4	13 x 4
14 x 4	15 x 4	16 x 2	17 x 2

4/24

77/LAGOA-120/231225/

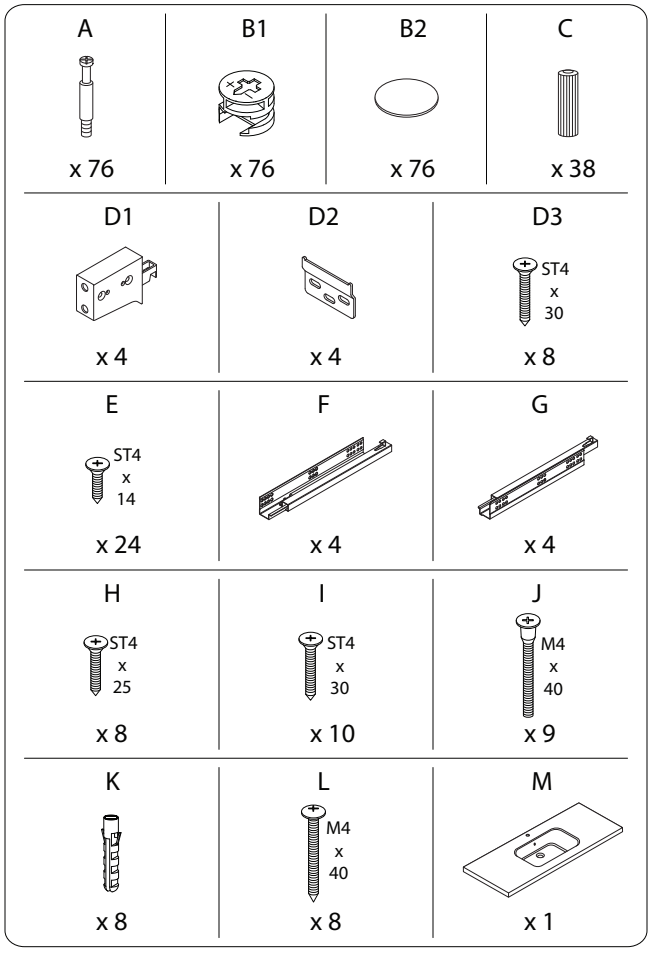
A
x 76
B1
x 76
B2
x 76
C
x 38
D1
x 4
D2
x 4
D3
ST4
x
30
x 8
E
ST4
x
14
x 24
F
x 4
G
x 4
H
ST4
x
25
x 8
I
ST4
x
30
x 10
J
M4
x
40
x 9
K
x 8
L
M4
x
40
x 8
M
x 1

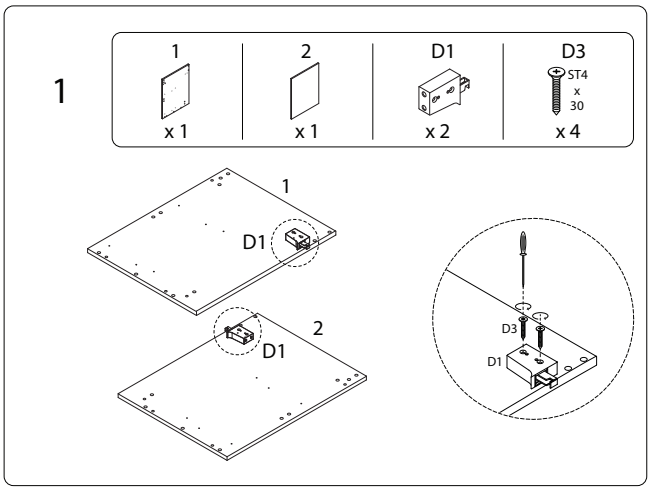
1
1
x 1
2
x 1
D1
x 2
D3
ST4
x
30
x 4
1
D1
2
D1
D3
D1

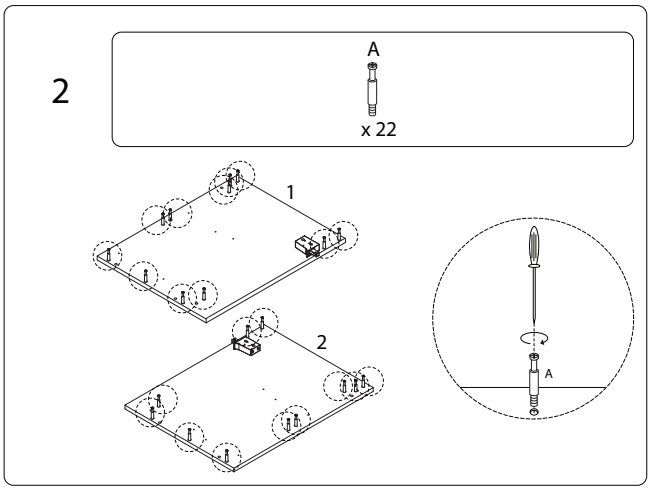
2
A
x 22
1
2
A

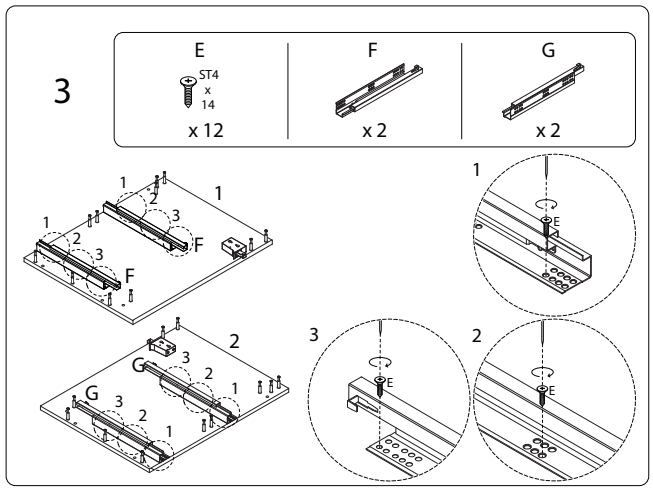
3
E
ST4
x
14
x 12
F
x 2
G
x 2
1
2
3
F
G
E

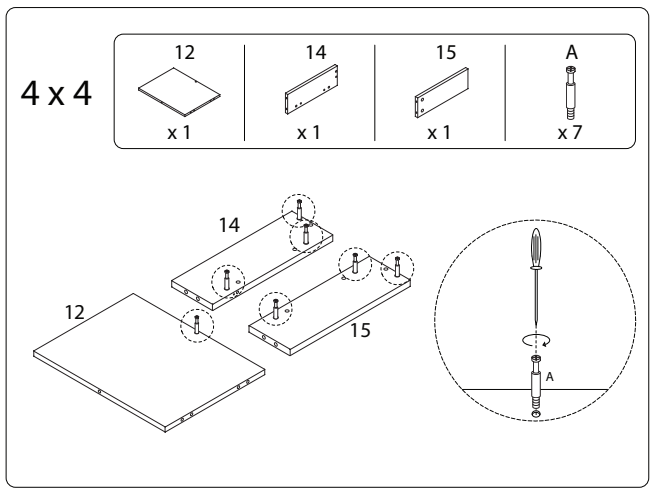
4 x 4
12
x 1
14
x 1
15
x 1
A
x 7
14
12
15
A

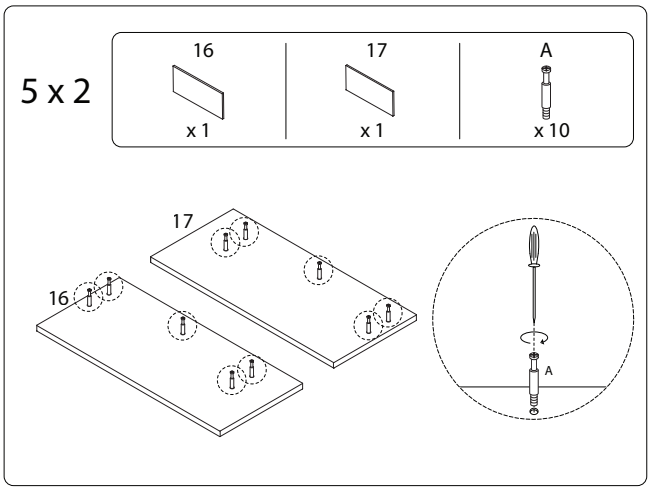
5 x 2
16
x 1
17
x 1
A
x 10
17
16
A

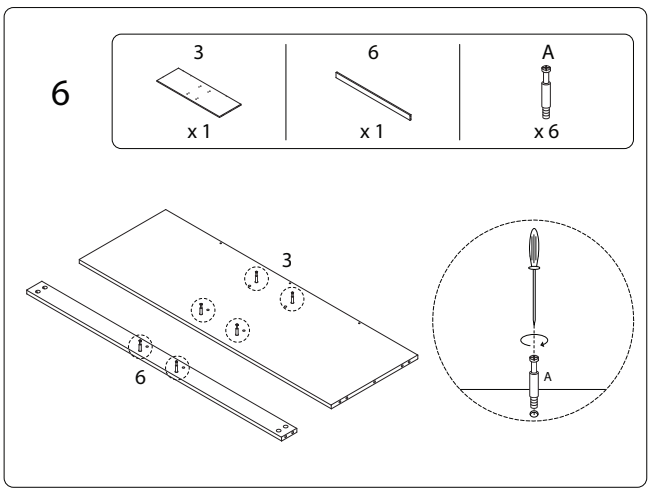
6
3
x 1
6
x 1
A
x 6
3
6
A

7 x 4

13 x 1

C x 6

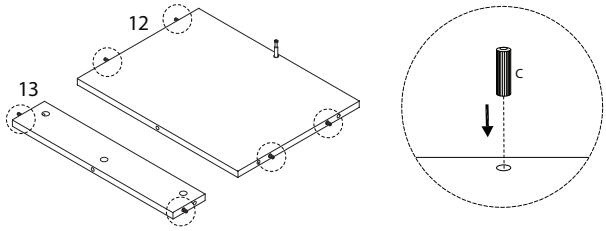

9

4 x 1

7 x 1

I ST4 x 30 x 10

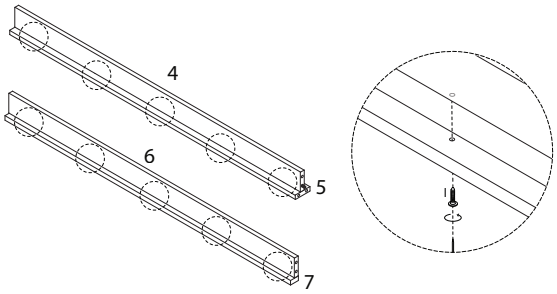

8

5 x 1

9 x 1

10 x 1

11 x 1

C x 14

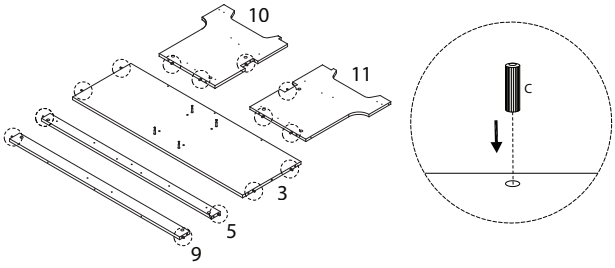

10

B1 x 6

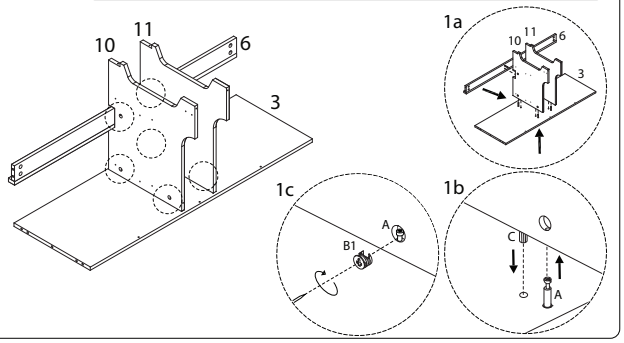

11

B2 x 6

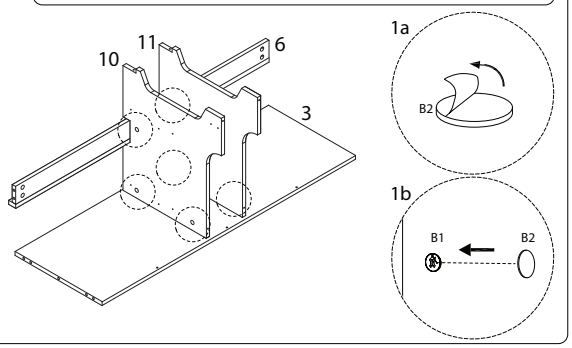

13

B2 x 6

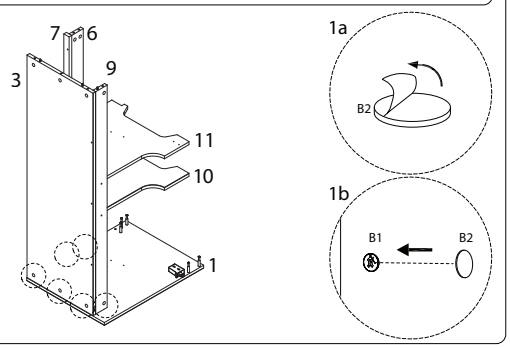

12

B1 x 6

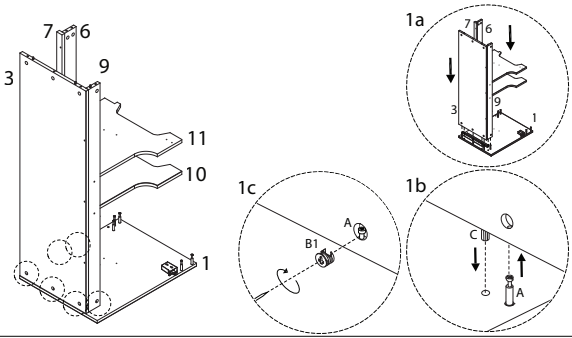

14

8 x 1

B1 x 5

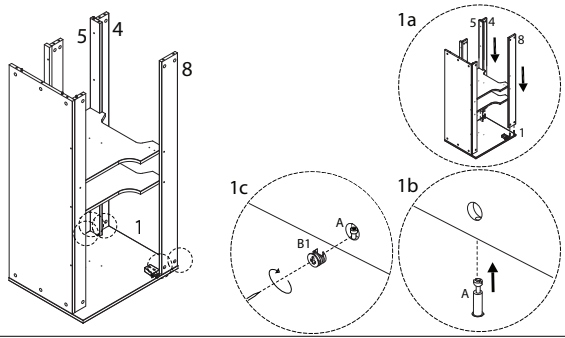

15

B2

x 5

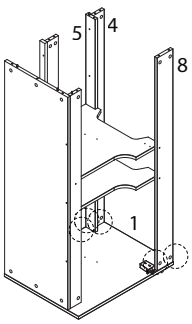

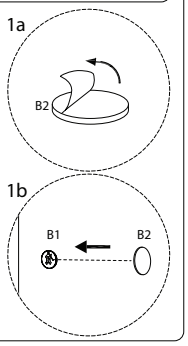

16

B1

x 11

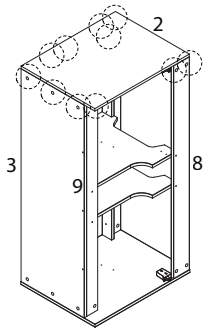

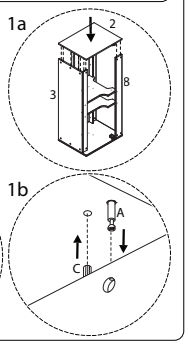

17

B2

x 11

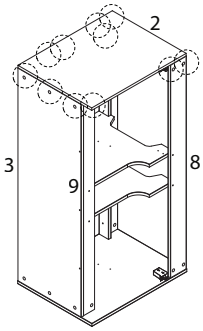

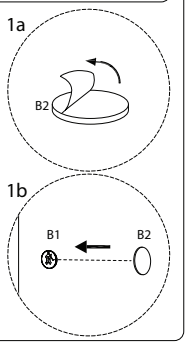

18

J

M4 x 40

x 7

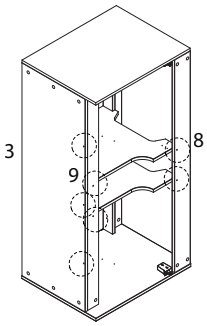

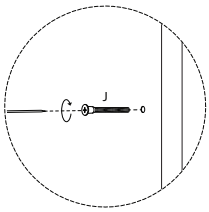

19

J

M4 x 40

x 2

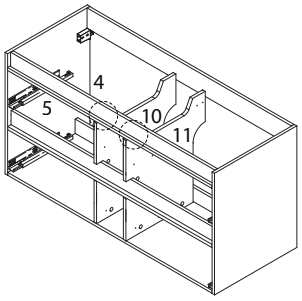

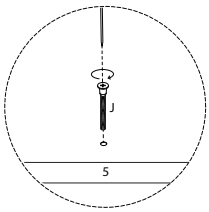

20

D1

x 2

D3

ST4 x 30

x 4

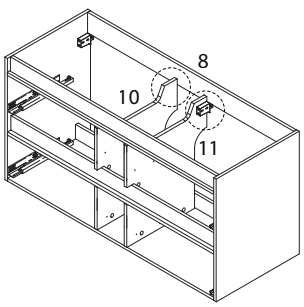

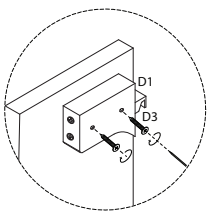

21

E

ST4 x 14

x 12

F

x 2

G

x 2

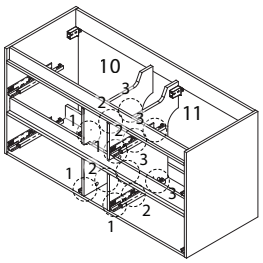

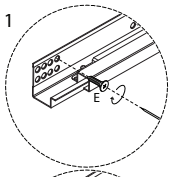

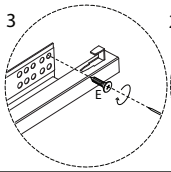

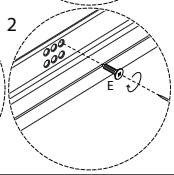

22 x 4

B1

x 1

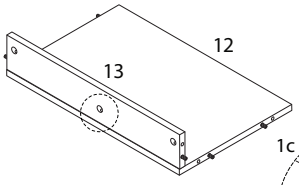

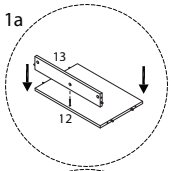

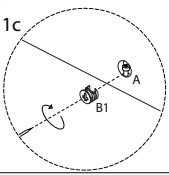

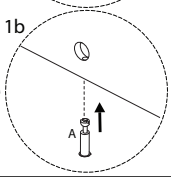

23 x 4

B2

x 1

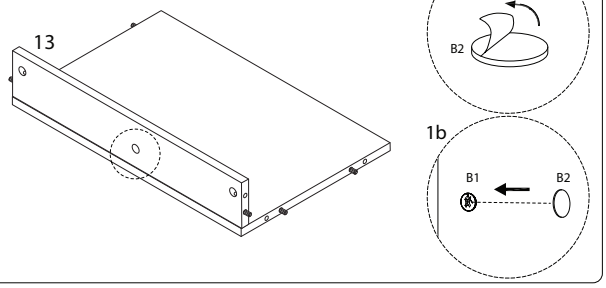

25 x 4

B2

x 6

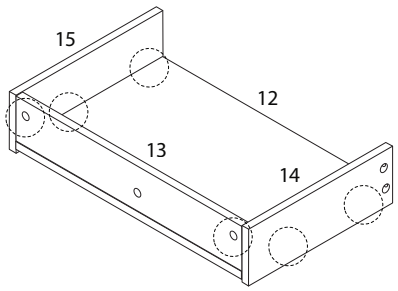

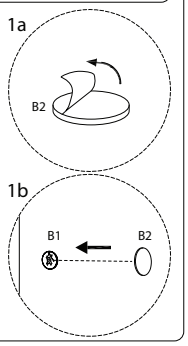

24 x 4

B1

x 6

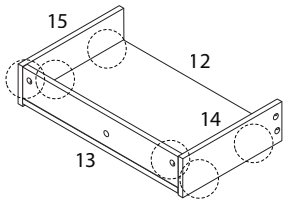

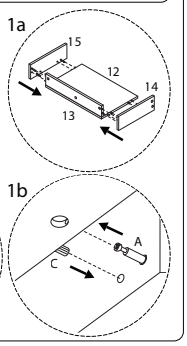

26 x 2

B1

x 5

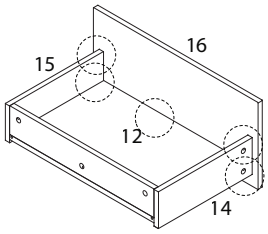

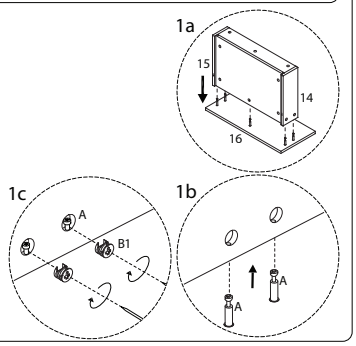

27 x 2

B2

x 5

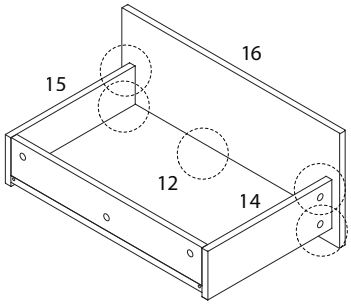

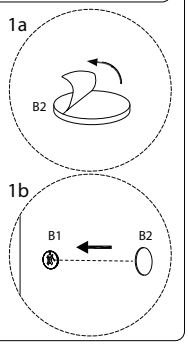

29 x 2

B2

x 5

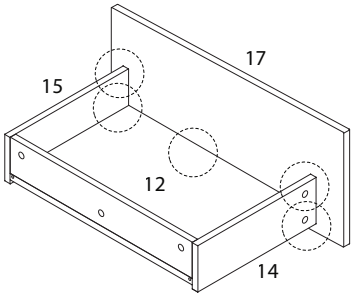

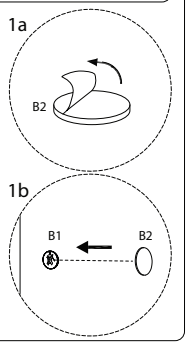

28 x 2

B1

x 5

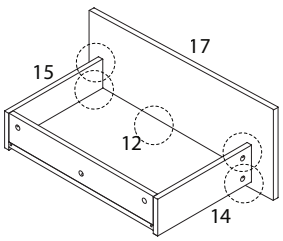

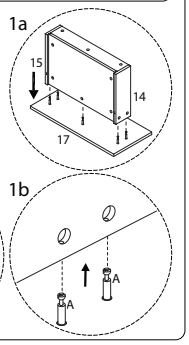

30

K

x 8

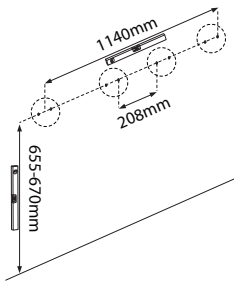

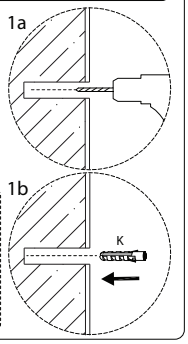

31

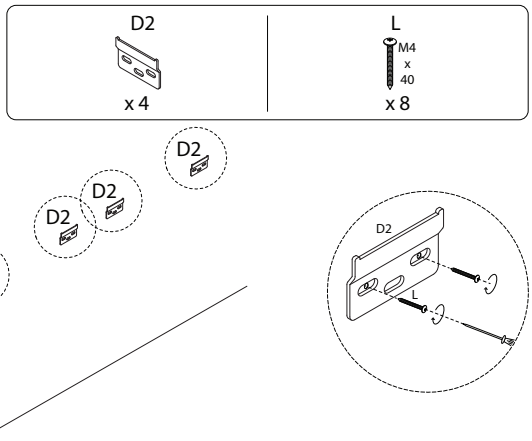

!

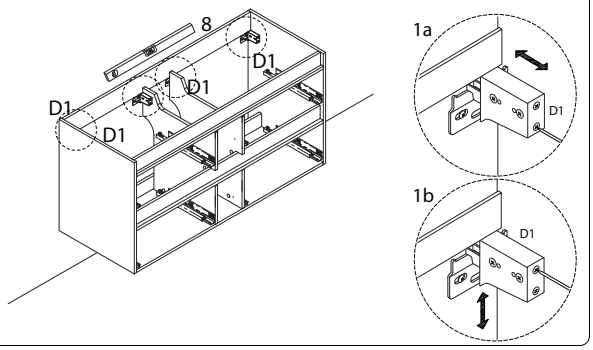

32

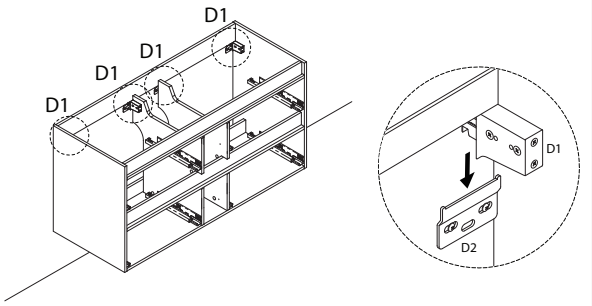

33

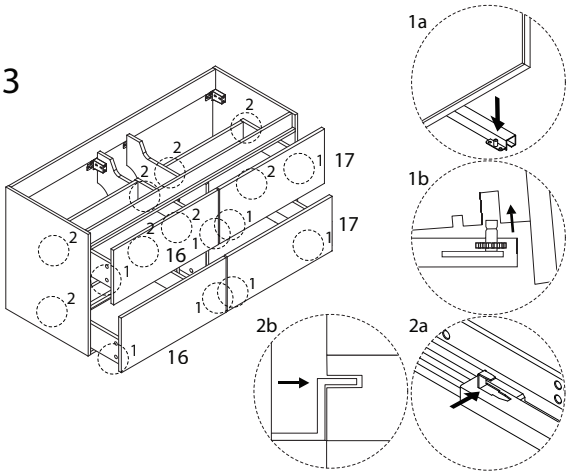

34

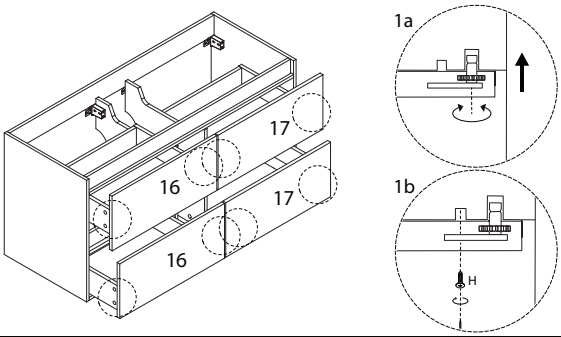

36

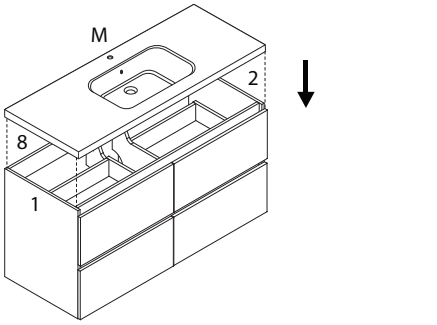

35

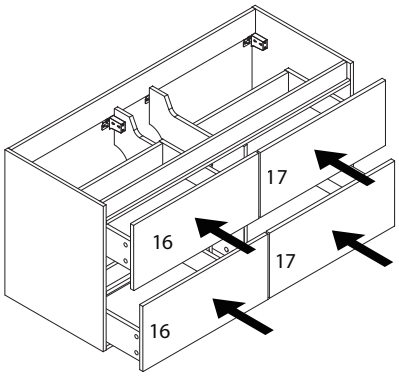

37

