CLUNES

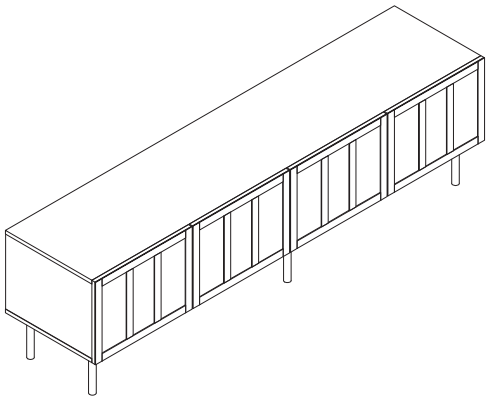

1/12

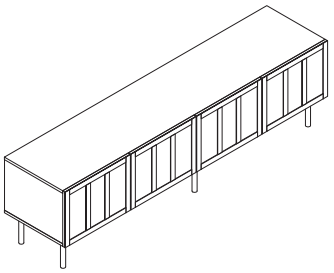

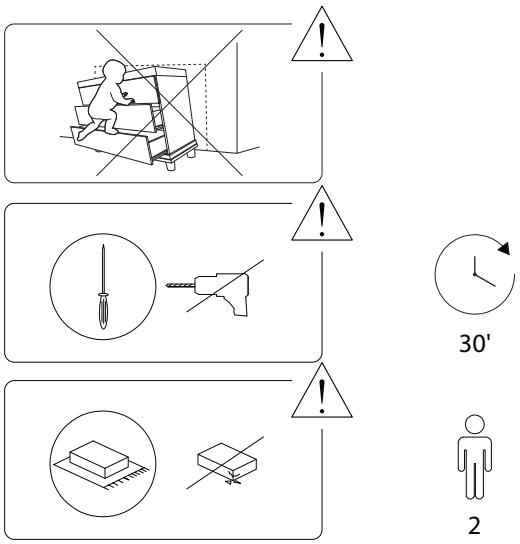

2/12

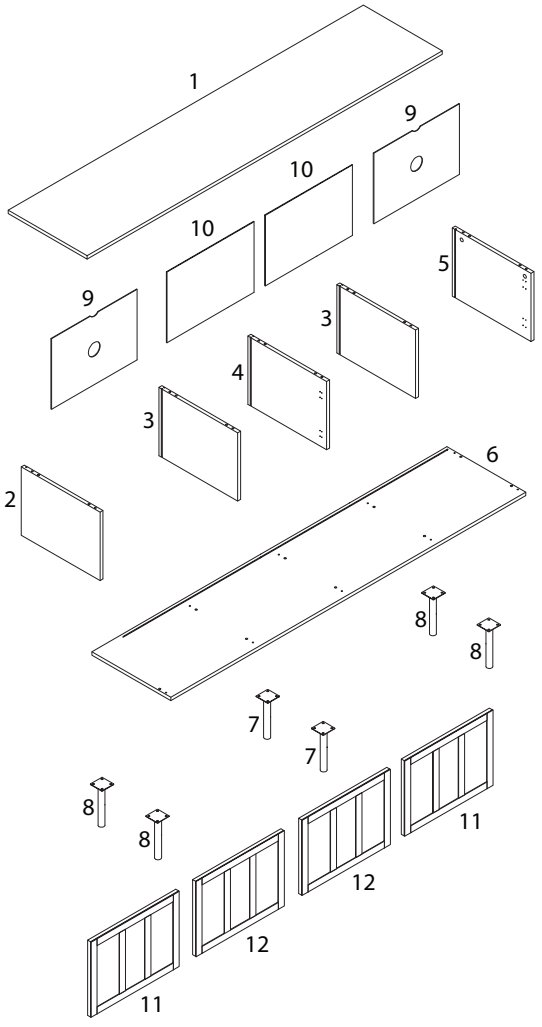

3/12

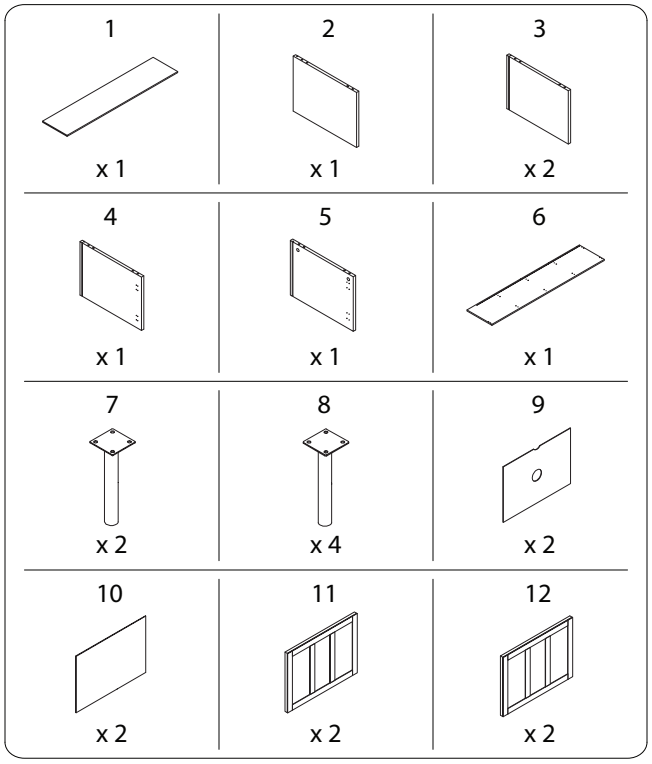

4/12

A	B	C
		
x 10	x 10	x 20
D	**E**	**F**
 M4 x 40	 M3.5 x 12	 M6 x 10
x 10	x 48	x 24
G	**H**	**I**
		
x 4	x 4	x 2
J	**K**	**M**
 M4 x 12	 M2.5 x 14	
x 2	x 16	x 16
N		
		
x 2		

1444/CLUNES/090326/

1

1	A	I	J
			M4 x 12
x 1	x 10	x 2	x 2

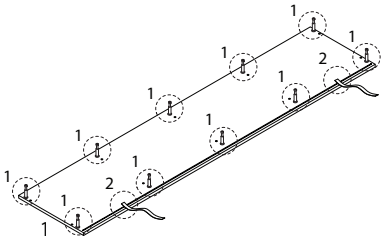

2

2	3	4	5	C
				
x 1	x 2	x 1	x 1	x 10

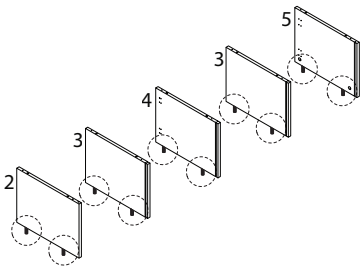

1444/CLUNES/090326/

3

B

x 10

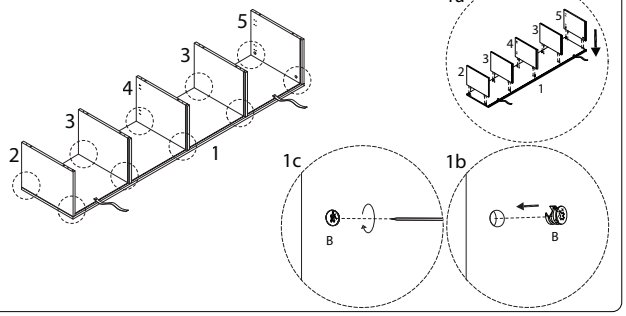

4

9	10
	
x 2	x 2

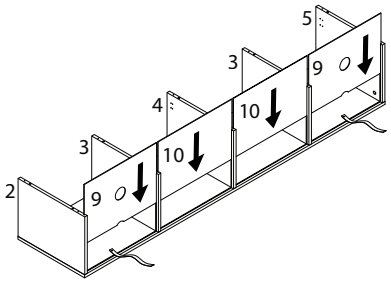

1444/CLUNES/090326/

5

C

x 10

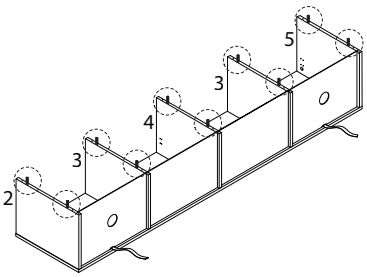

6

6	D
	 M4 x 40
x 1	x 10

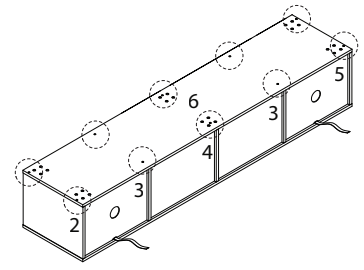

1444/CLUNES/090326/

7

7	8	F	N
x 2	x 4	M6 x 10 x 24	x 2

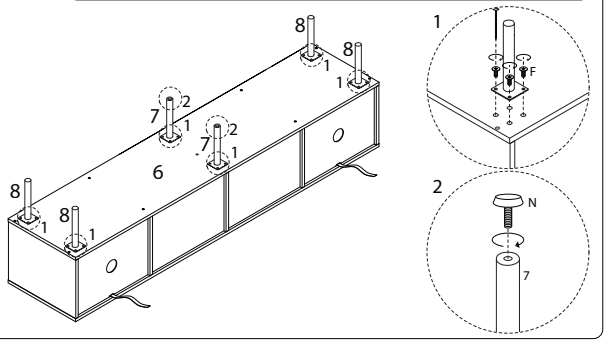

9 x 2

11	12	E	G	H
x 1	x 1	M3.5 x 12 x 8	x 2	x 2

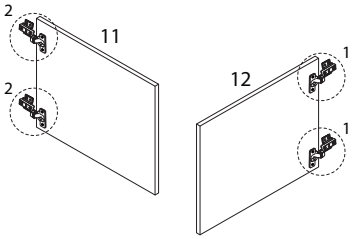

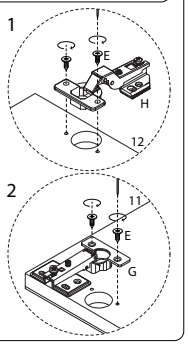

8

K	M
M2.5 x 14 x 16	x 16

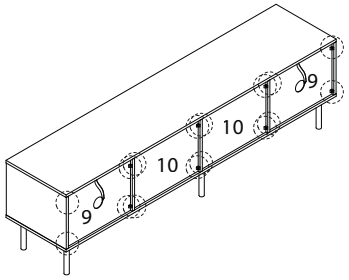

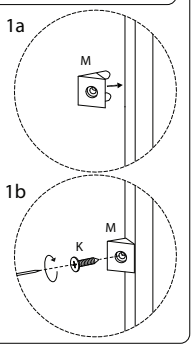

10

E
M3.5 x 12 x 32

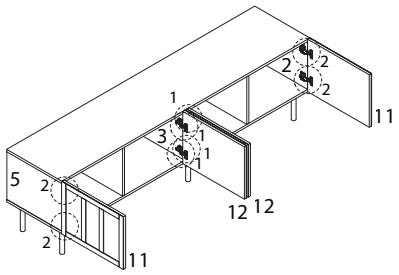

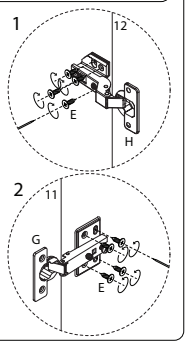

11

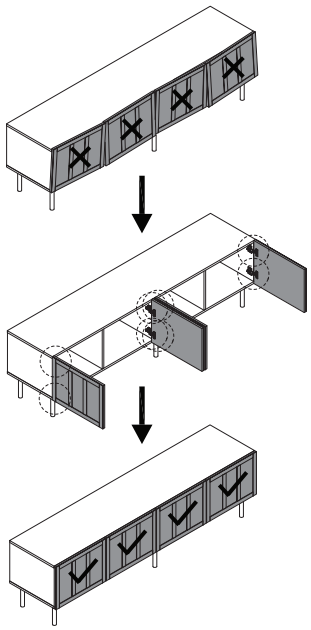

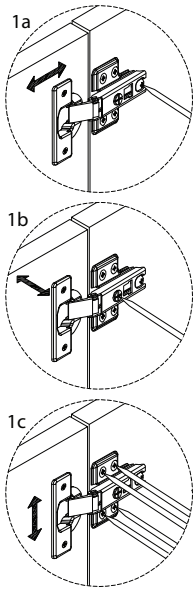

!

