

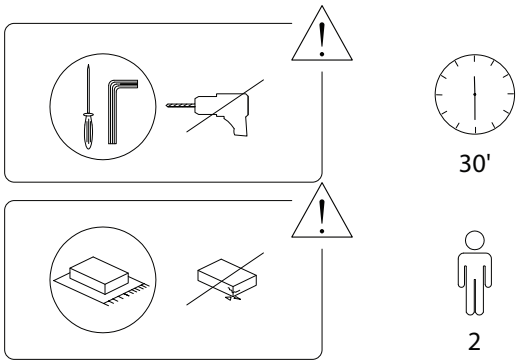

1/5

777/AURE/120722/

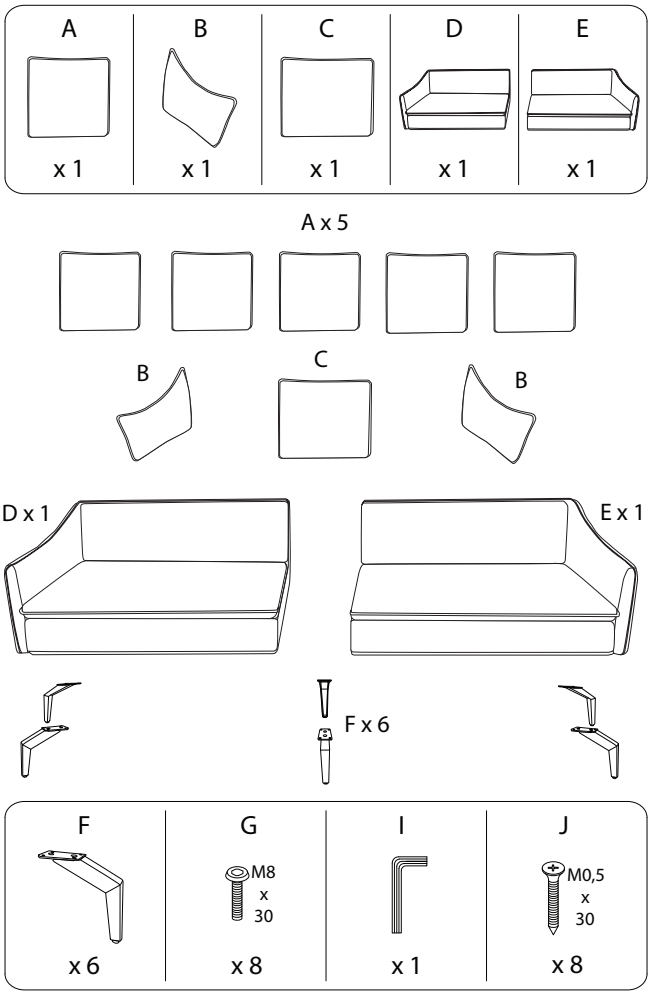

2/5

777/AURE/120722/

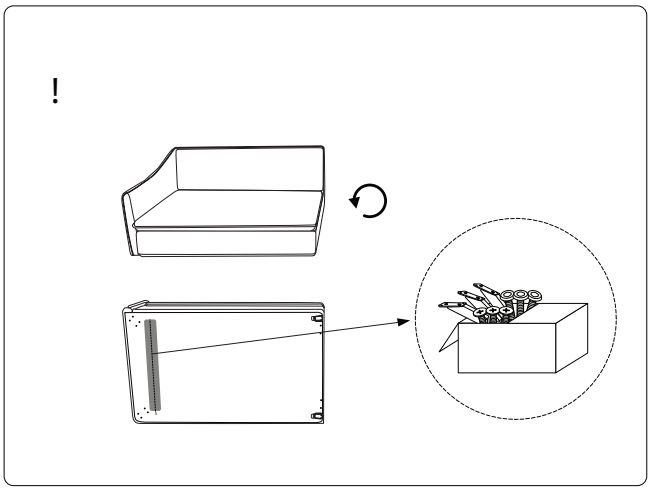

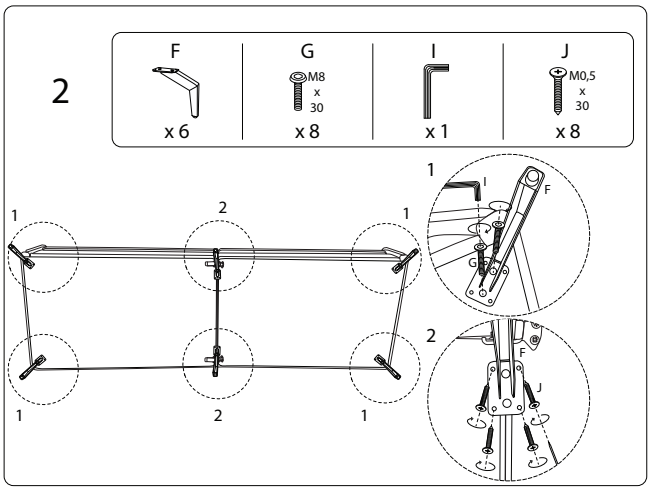

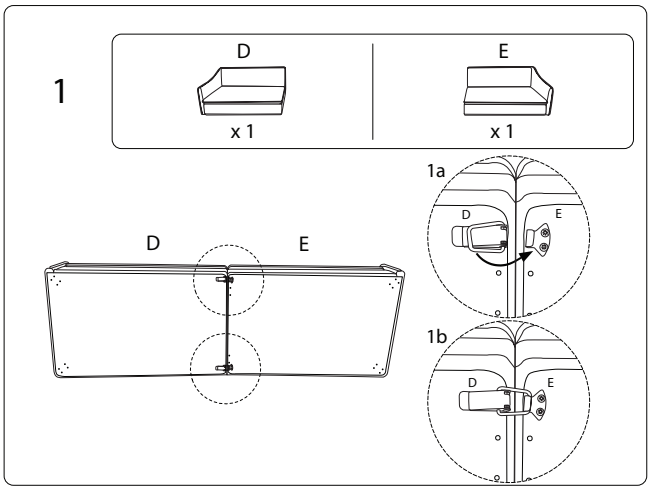

3/5

777/AURE/120722/

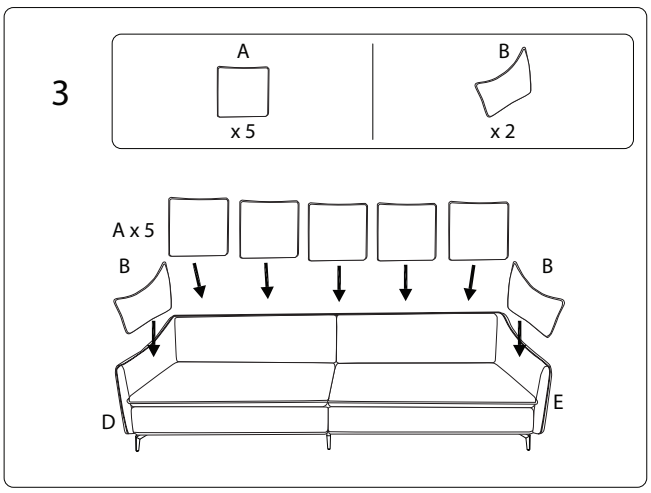

4/5

777/AURE/120722/

4

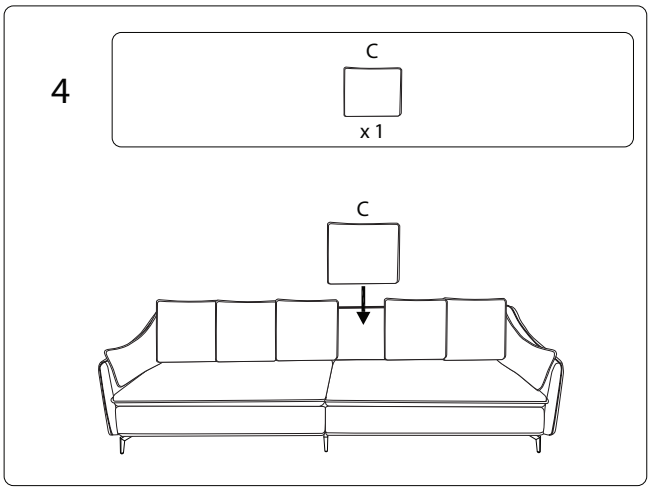

777/AURE/120722/