THALIA

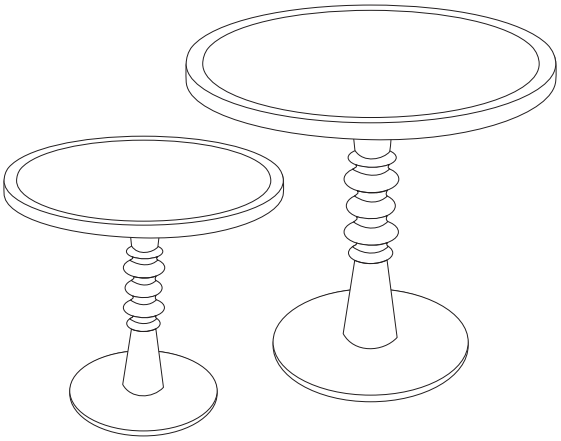

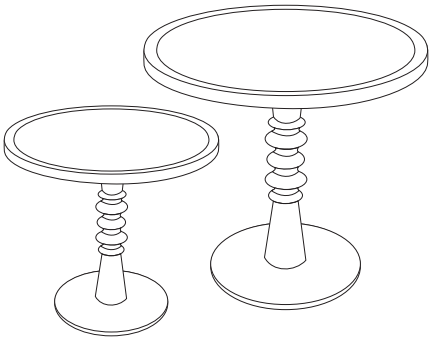

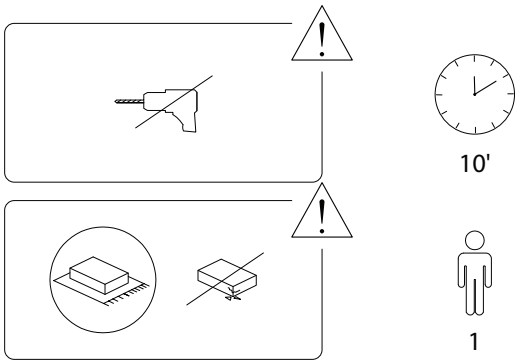

1/4

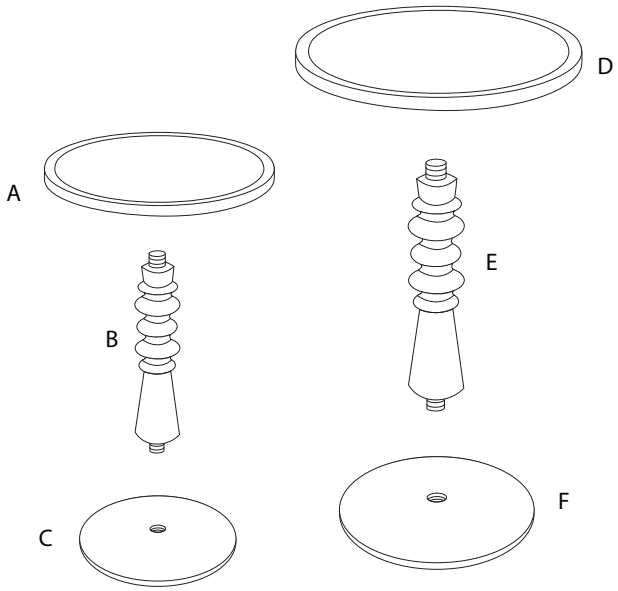

A	B	C	D	E	F
x 1	x 1	x 1	x 1	x 1	x 1

2/4

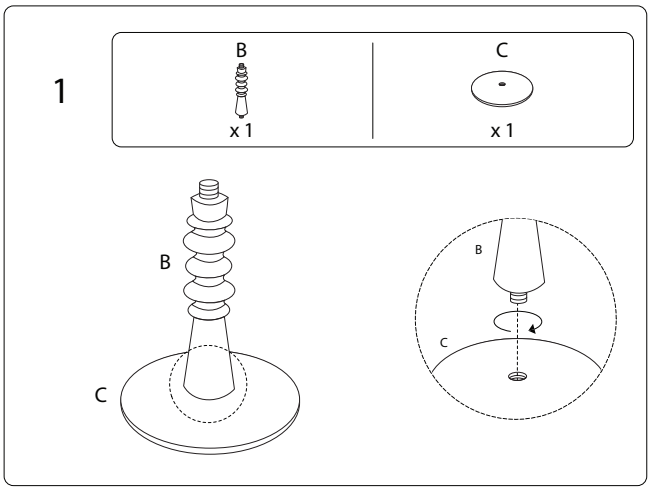

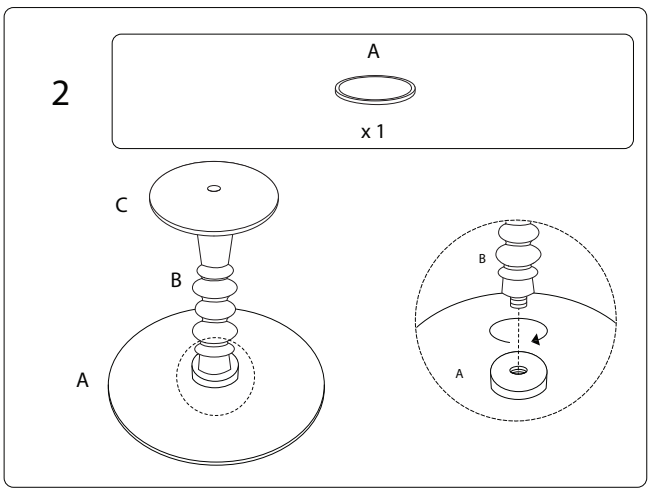

3/4

2009/THALIA/270824/

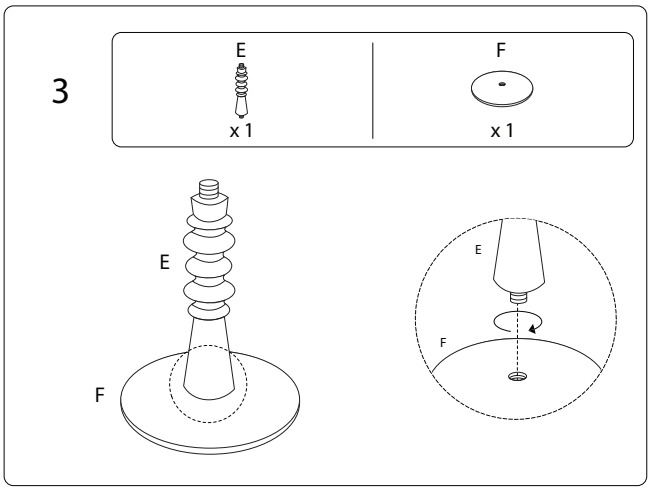

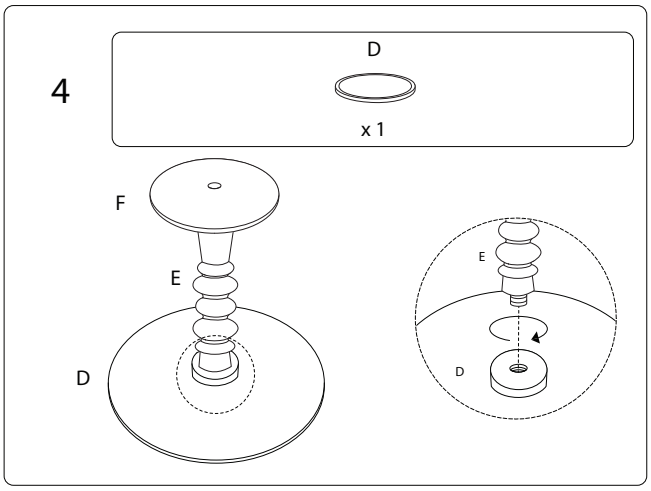

2009/THALIA/270824/