CASTELNAVET

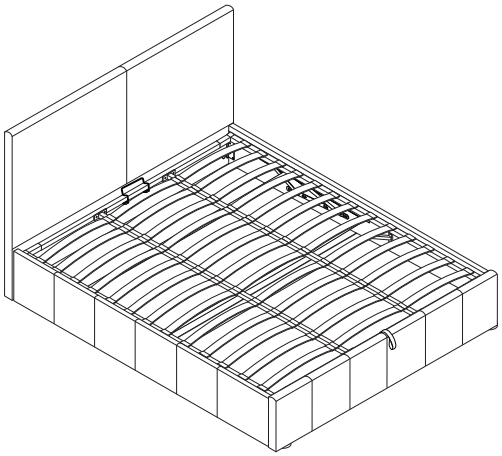

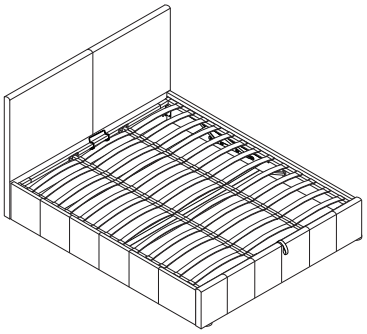

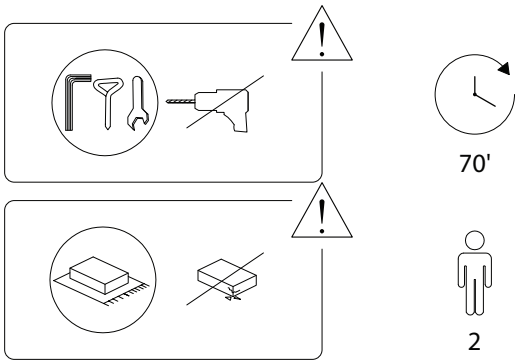

1/15

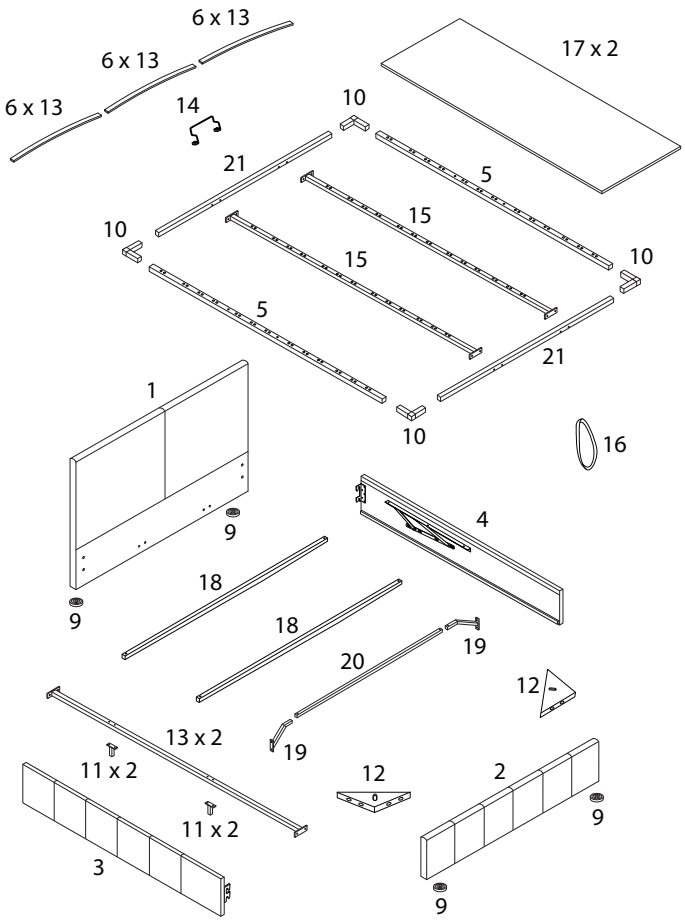

2/15

1 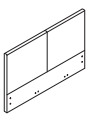 x 1	2 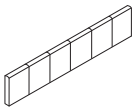 x 1	3 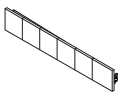 x 1	4 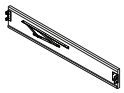 x 1
5  x 2	6 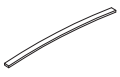 x 39	7 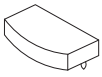 x 26	8 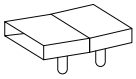 x 26
9  x 4	10 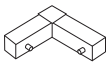 x 4	11  x 4	12 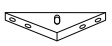 x 2
13 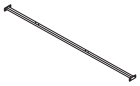 x 2	14  x 1	15  x 2	16  x 1
17 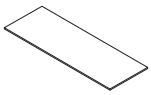 x 2	18 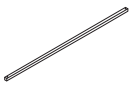 x 2	19  x 2	20 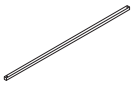 x 1

3/15

21	A
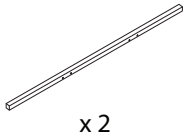	
x 2	x 28

B	C	D
		
x 18	x 22	x 8

E	F	G
		
x 8	x 1	x 1

H	I1	I2
		
x 2	x 2	x 2

J	K	L
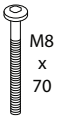		
x 4	x 1	x 4

2057/CASTELNAVET/300425/

!

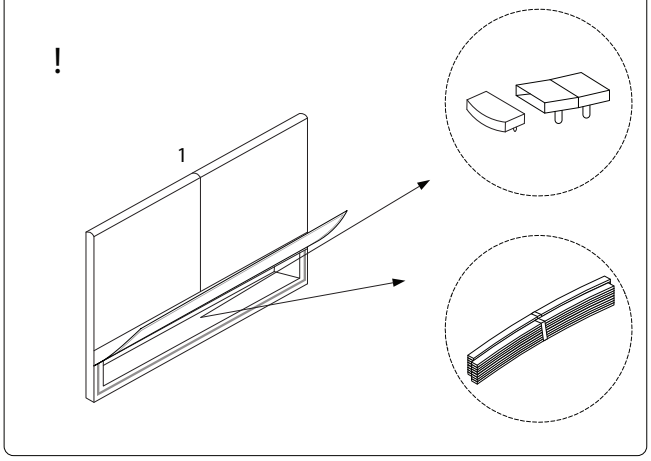

1

1	2	9	K	L
				
x 1	x 1	x 4	x 1	x 4

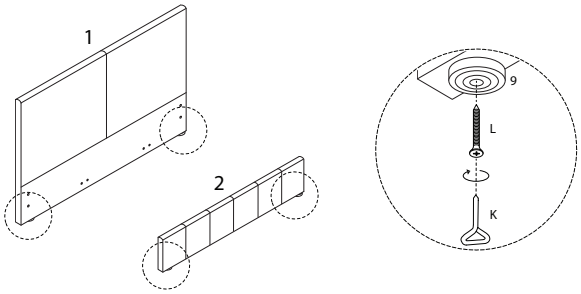

2057/CASTELNAVET/300425/

2

A	D	E	F
			
x 8	x 8	x 8	x 1

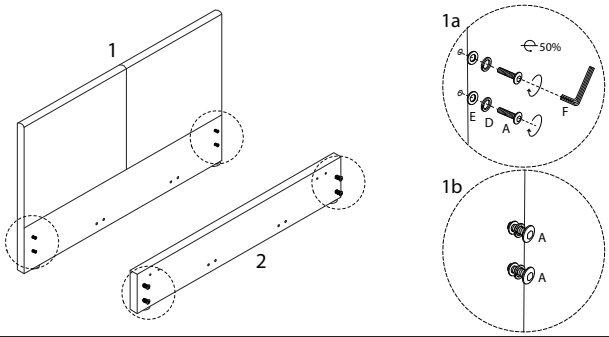

4

12	A	F
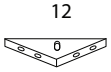		
x 2	x 8	x 1

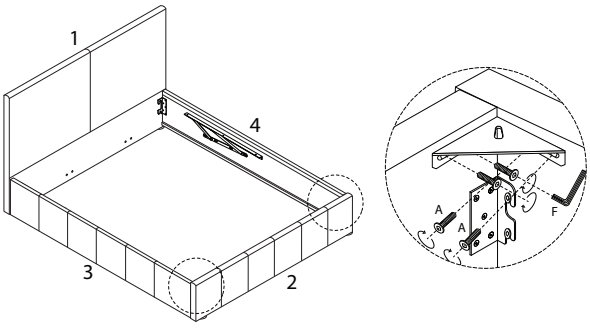

3

3	4	F
		
x 1	x 1	x 1

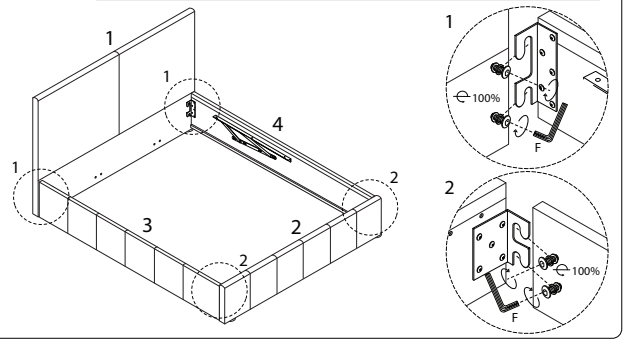

5 x 2

11	13	B	C	F	G
					
x 2	x 1	x 4	x 4	x 1	x 1

2057/CASTELNAVET/300425/

2057/CASTELNAVET/300425/

6

A	F
M8 x 30	M5
x 8	x 1

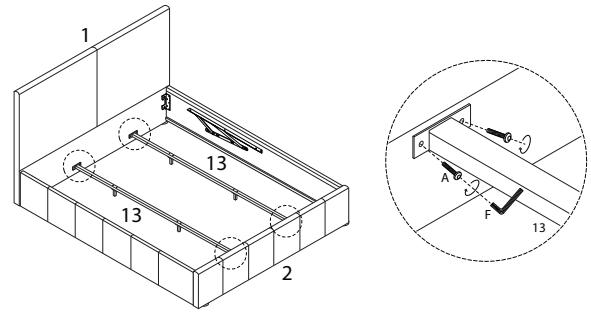

8

A	F
M8 x 30	M5
x 4	x 1

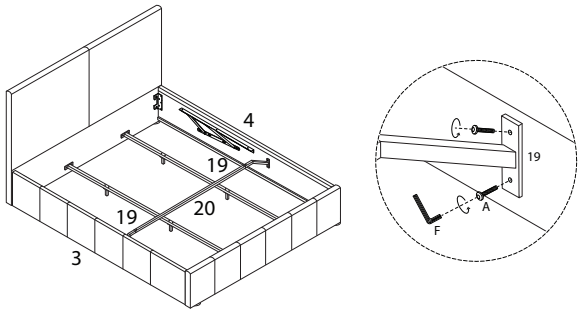

7

19	20	H	l_1	l_2
		M4	M6 x 20	M6 x 20
x 2	x 1	x 2	x 2	x 2

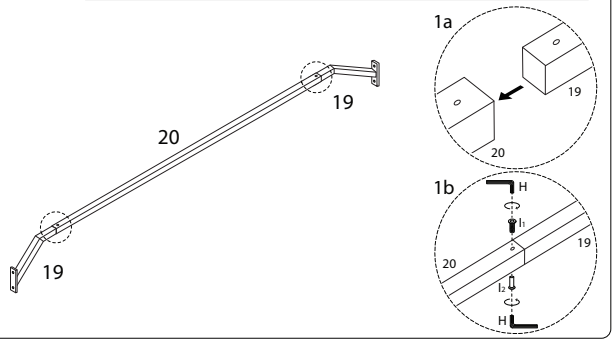

9

17
x 2

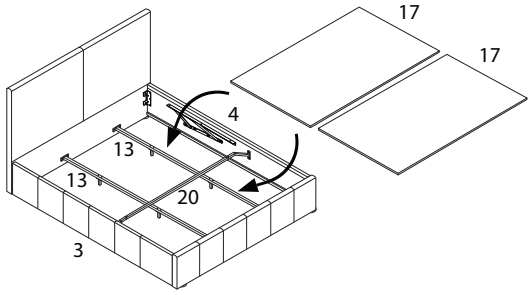

10

5	10	21
x 2	x 4	x 2

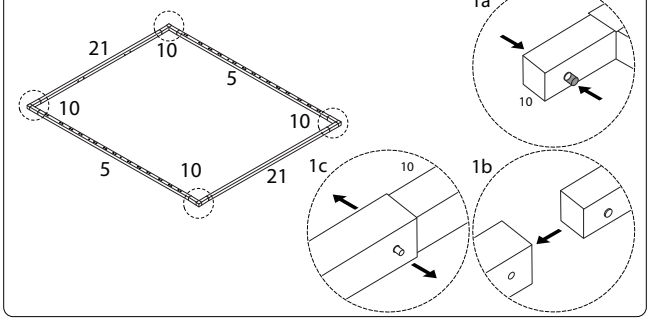

12

14
x 1

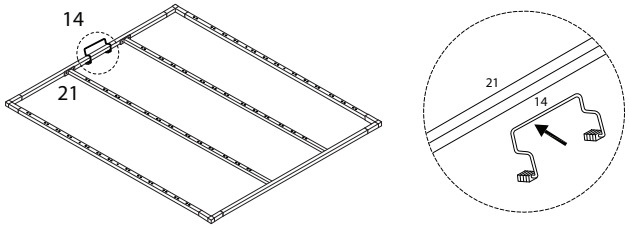

11

15	B	C	F	G
	M8 x 40		M5	
x 2	x 8	x 8	x 1	x 1

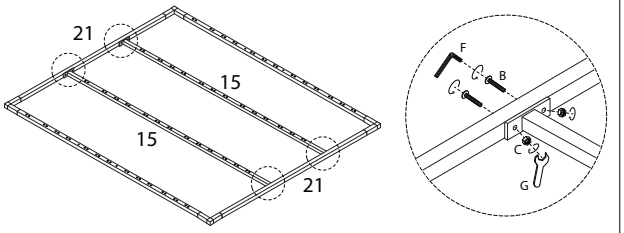

13

16
x 1

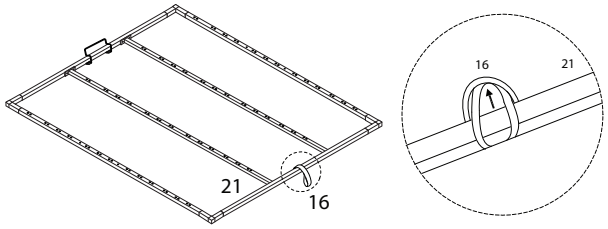

14

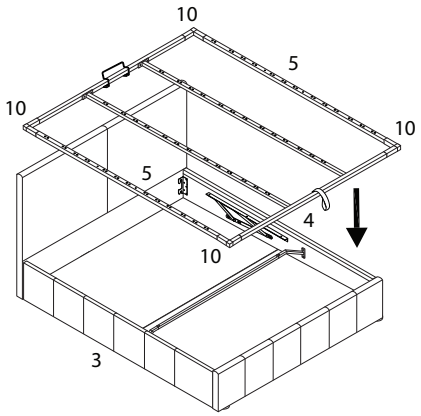

16

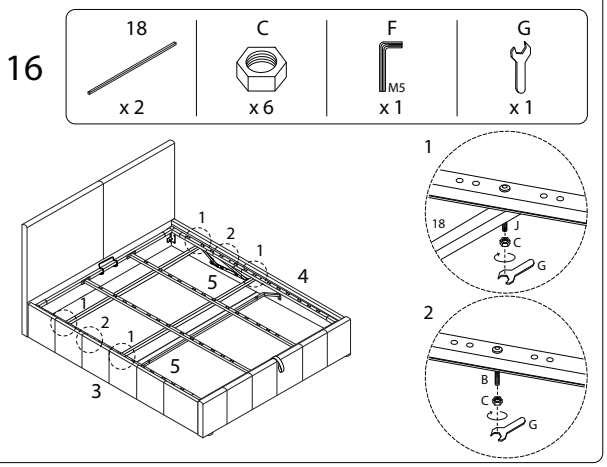

15

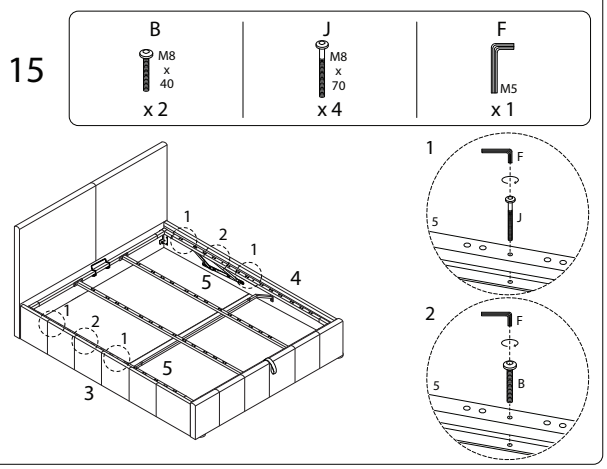

17

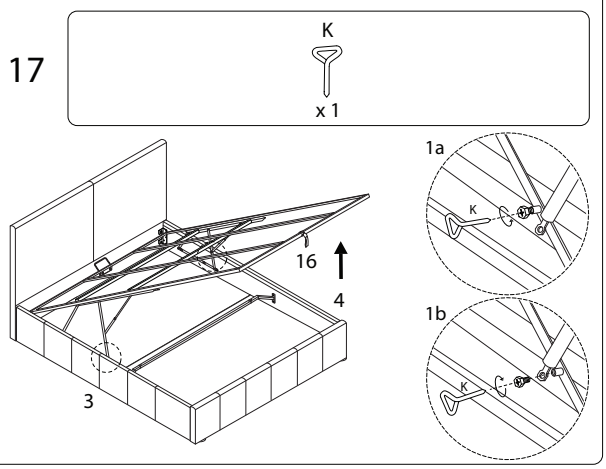

18 x 13

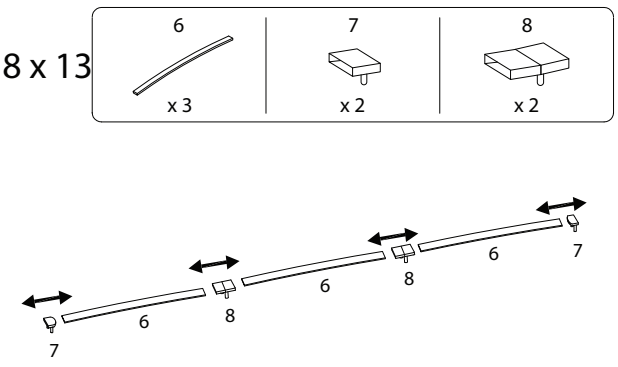

19

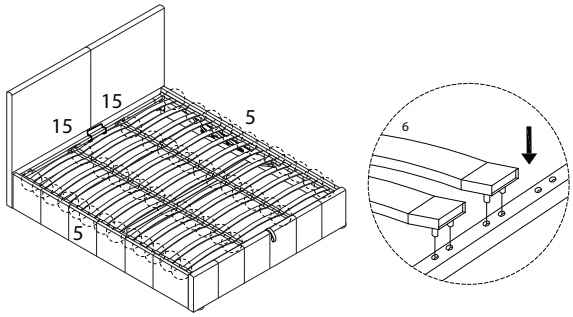

!

