SUSVILLE

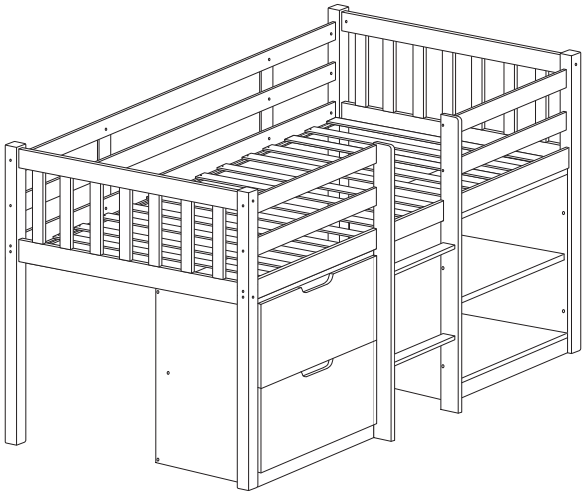

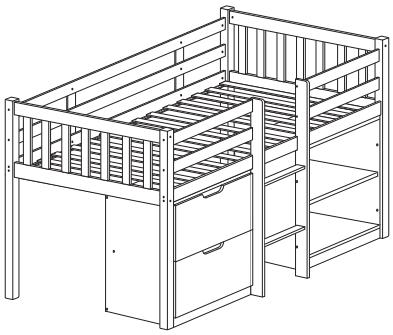

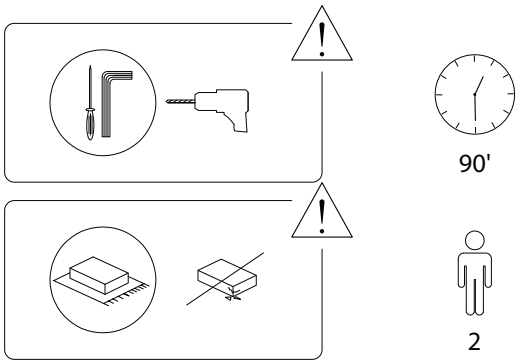
90'
2

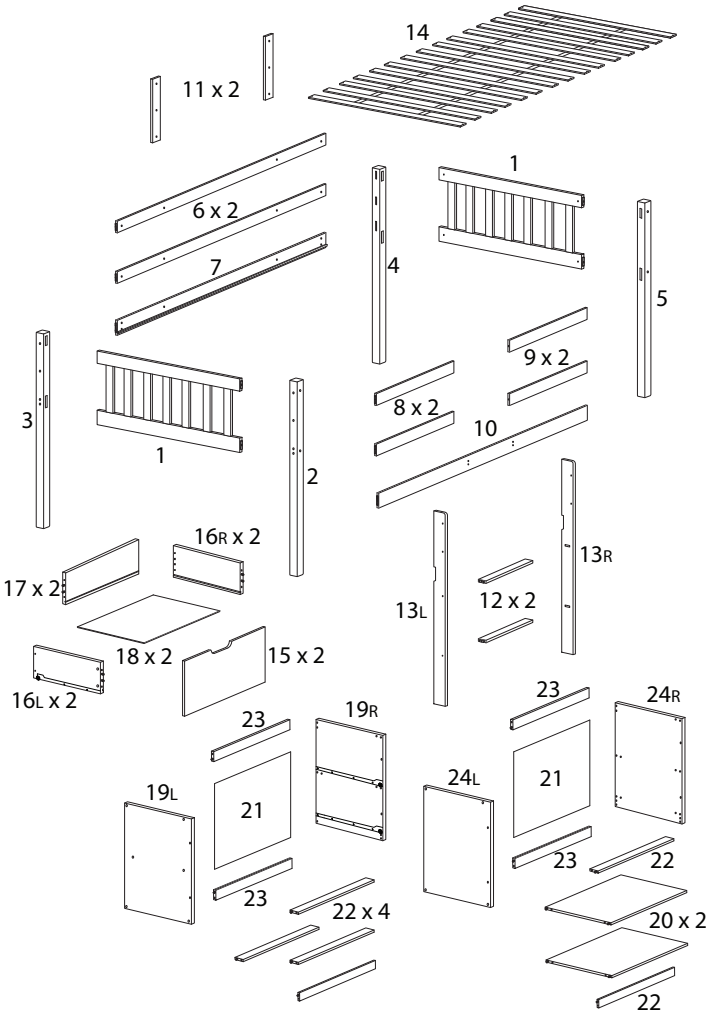
14
11 x 2
1
6 x 2
7
4
5
9 x 2
3
8 x 2
10
1
2
16R x 2
13R
17 x 2
12 x 2
13L
18 x 2
15 x 2
16L x 2
23
24R
19R
23
24L
21
19L
21
23
22
23
22 x 4
20 x 2
22

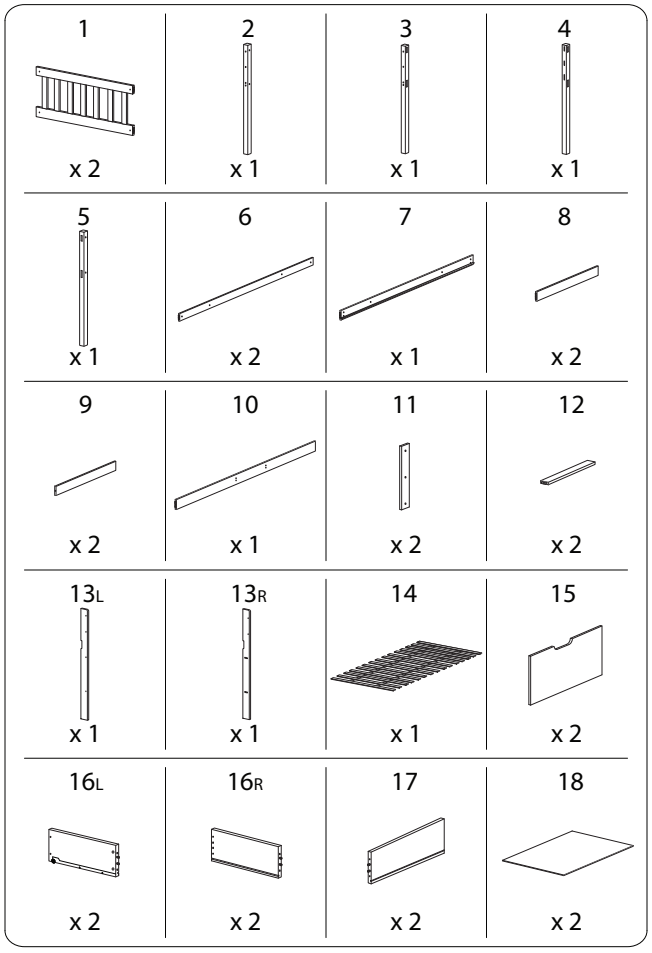
1
x 2
2
x 1
3
x 1
4
x 1
5
x 1
6
x 2
7
x 1
8
x 2
9
x 2
10
x 1
11
x 2
12
x 2
13L
x 1
13R
x 1
14
x 1
15
x 2
16L
x 2
16R
x 2
17
x 2
18
x 2

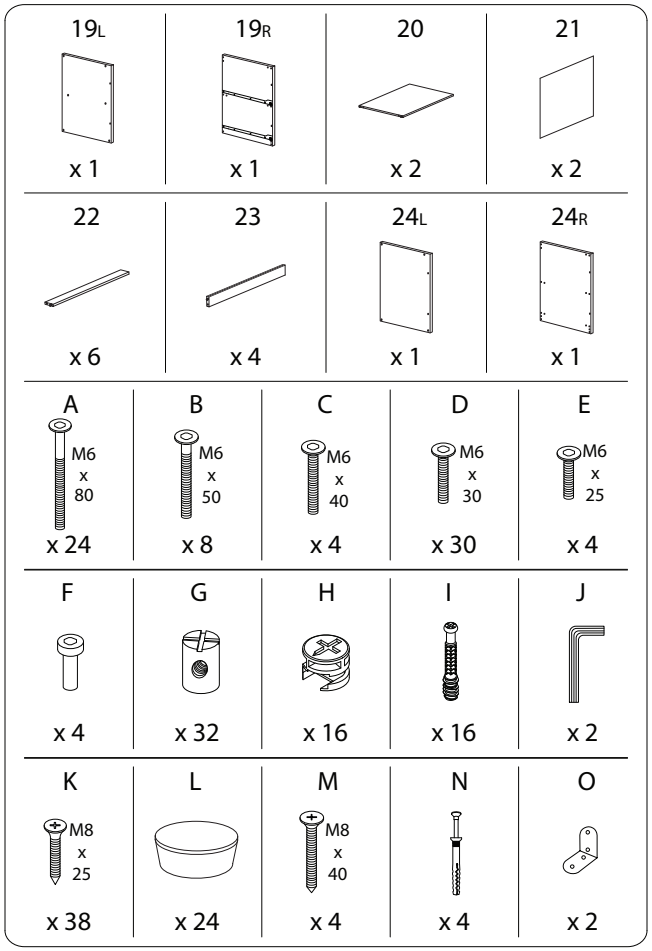
19L x 1
19R x 1
20 x 2
21 x 2
22 x 6
23 x 4
24L x 1
24R x 1
A M6 x 80 x 24
B M6 x 50 x 8
C M6 x 40 x 4
D M6 x 30 x 30
E M6 x 25 x 4
F x 4
G x 32
H x 16
I x 16
J x 2
K M8 x 25 x 38
L x 24
M M8 x 40 x 4
N x 4
O x 2

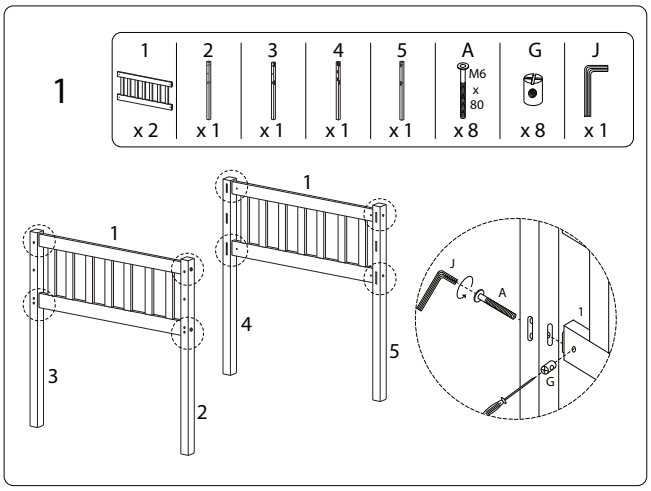
1
1 x 2
2 x 1
3 x 1
4 x 1
5 x 1
A M6 x 80 x 8
G x 8
J x 1

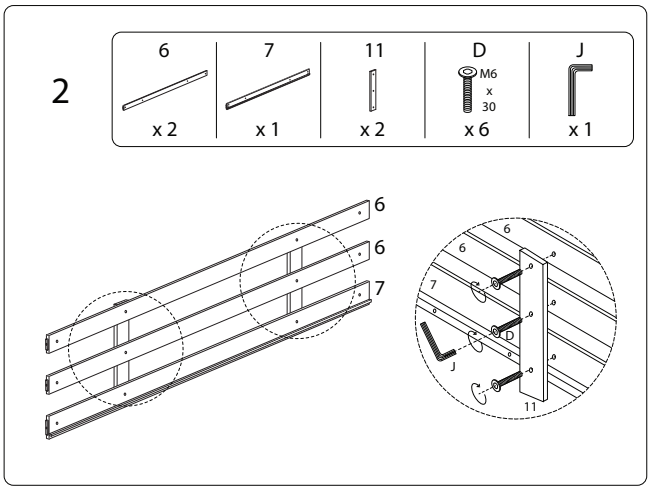
2
6 x 2
7 x 1
11 x 2
D M6 x 30 x 6
J x 1

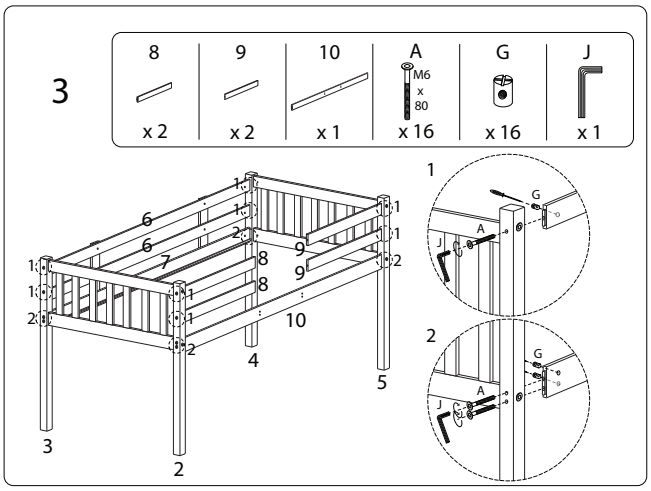
3
8 x 2
9 x 2
10 x 1
A M6 x 80 x 16
G x 16
J x 1

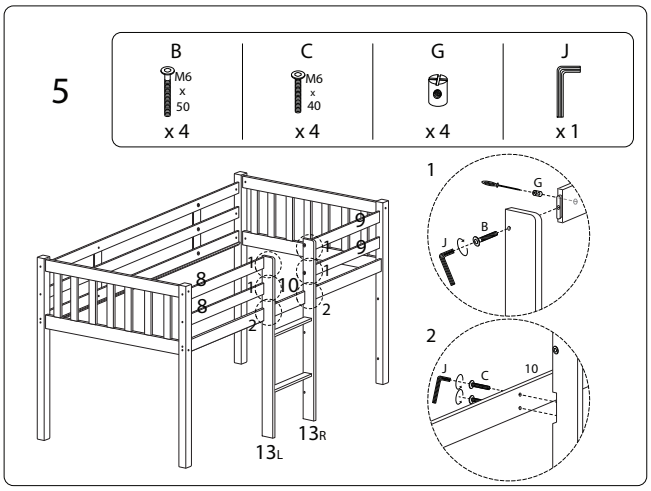
5
B M6 x 50 x 4
C M6 x 40 x 4
G x 4
J x 1

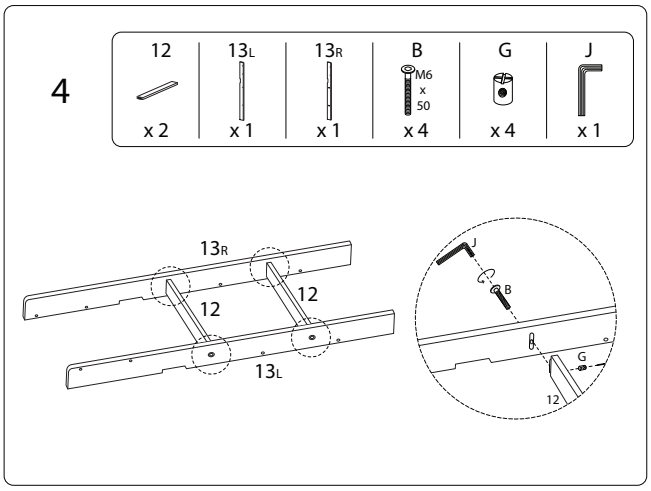
4
12 x 2
13L x 1
13R x 1
B M6 x 50 x 4
G x 4
J x 1

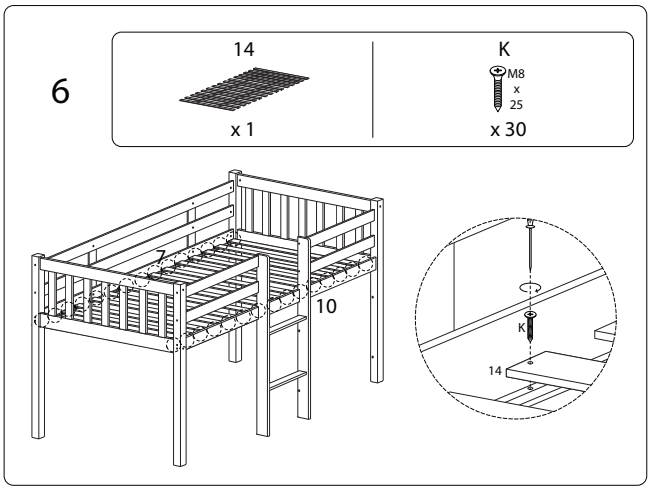
6
14 x 1
K M8 x 25 x 30

7 x 2

15	I
x 1	x 4

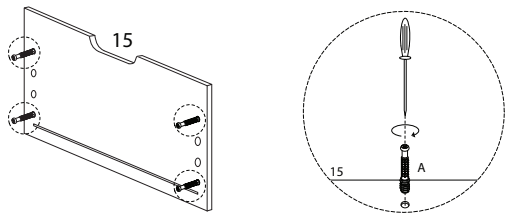

8 x 2

16_L	16_R
x 1	x 1

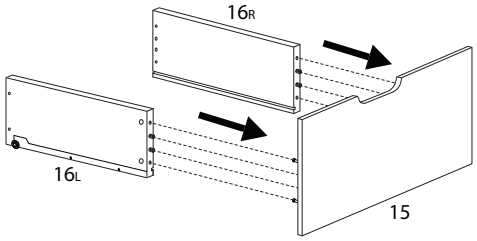

9 x 2

H
x 4

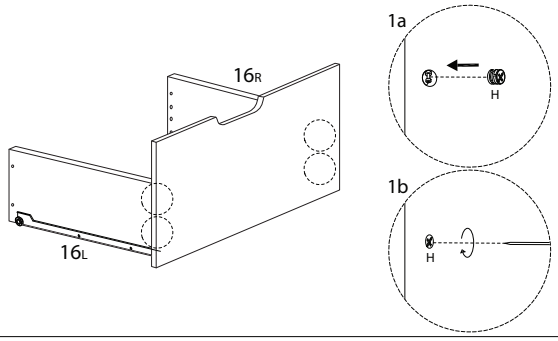

10 x 2

18
x 1

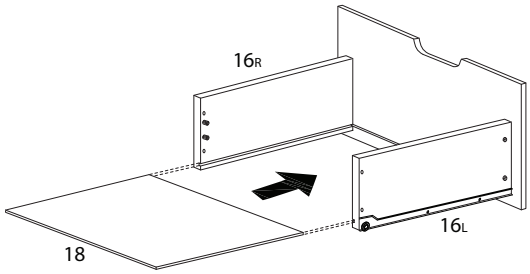

11 x 2

17	K
x 1	M8 x 25 x 4

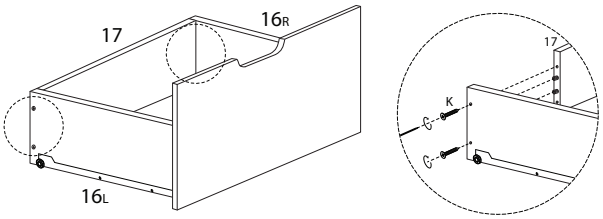

12

23	24_L	D	J
x 2	x 1	M6 x 30 x 2	x 1

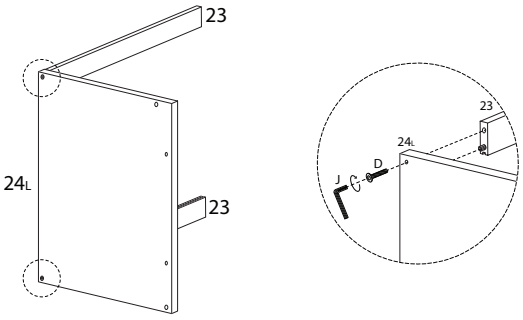

13

21
x 1

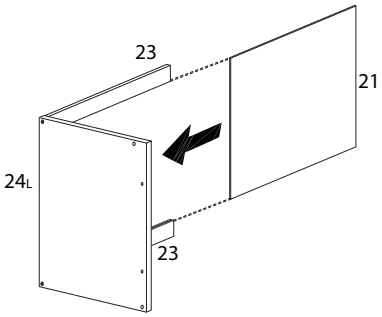

14

I
x 4

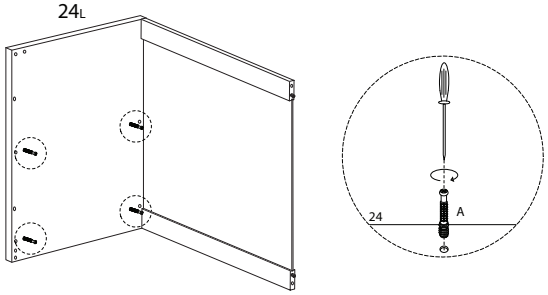

15

20	H
x 2	x 4

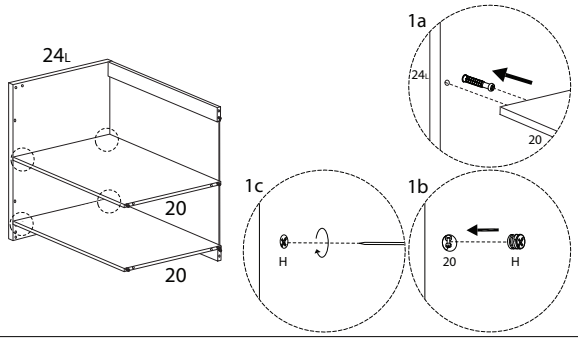

16

22	D	J
x 2	M6 x 30 x 2	x 1

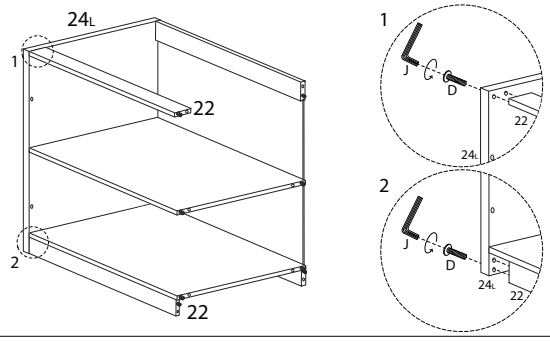

17

24R	I
x 1	x 4

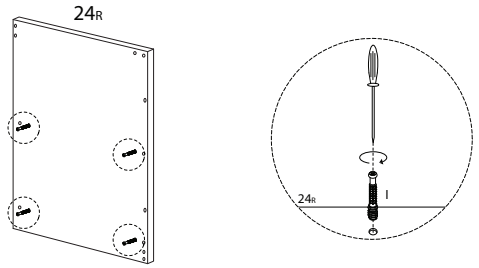

18

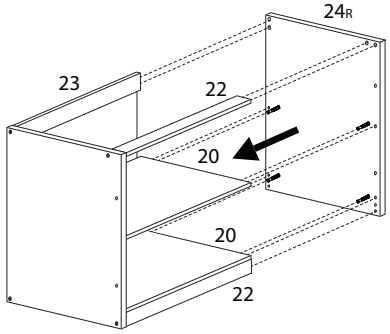

19

D	J
M6 x 30 x 4	x 1

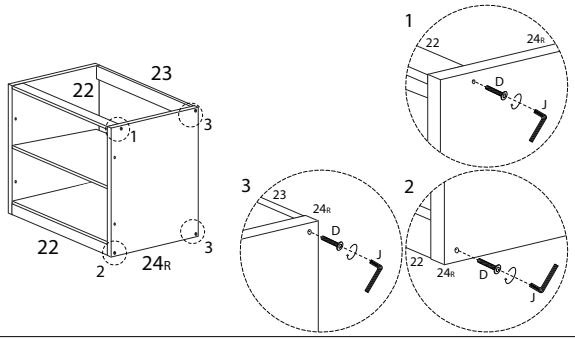

20

H
x 4

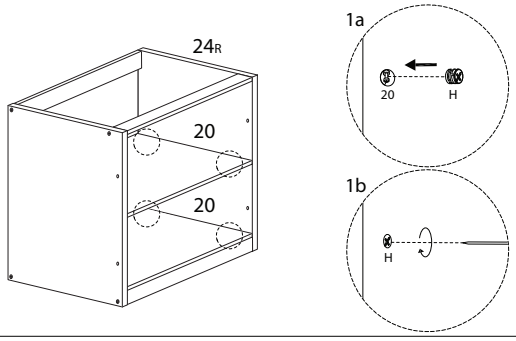

21

19L	23	D	J
x 1	x 2	M6 x 30 x 2	x 1

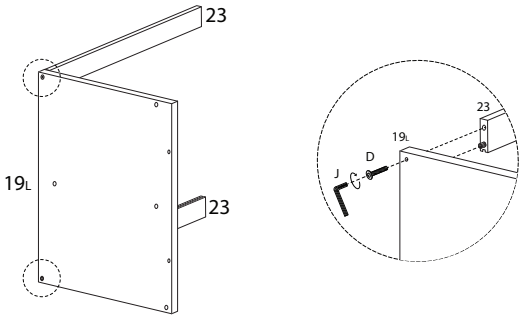

22

21
x 1

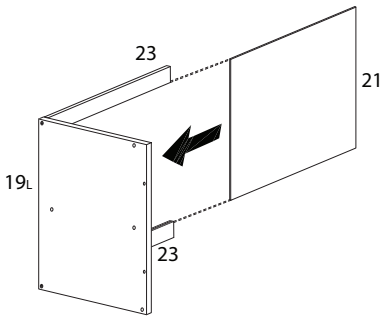

23

22	D	J
x 4	M6 x 30 x 4	x 1

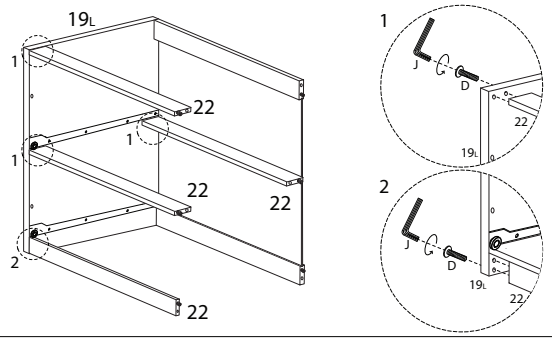

24

19R	D	J
x 1	M6 x 30 x 6	x 1

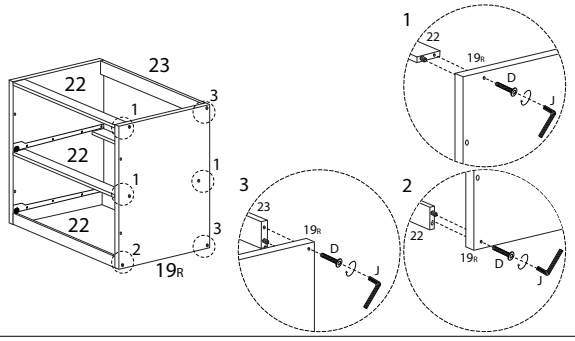

25

E	F	J
M6 x 25 x 4	x 4	x 2

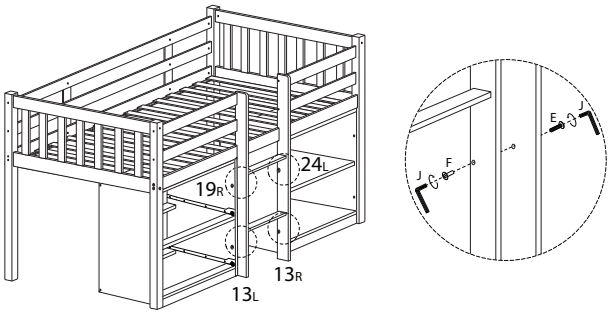

26

D	J
M6 x 30 x 4	x 1

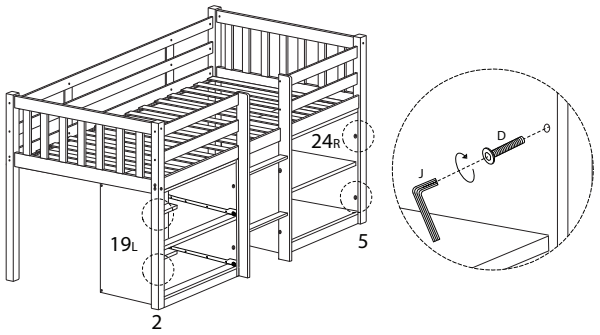

27

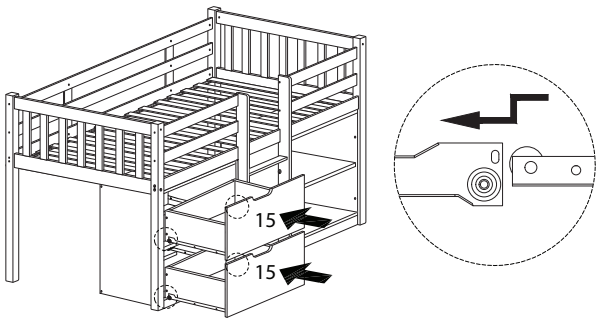

28

L
x 24

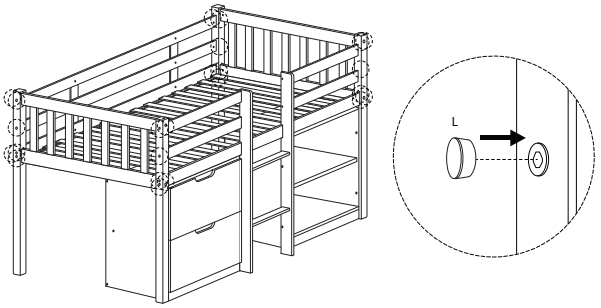

29

M	N	O
M8 x 40 x 4	x 4	x 2

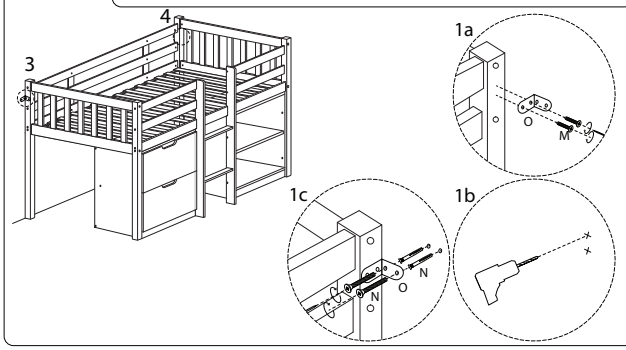

!

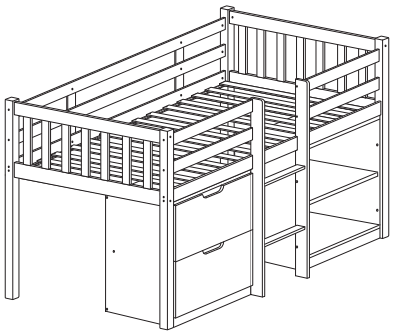

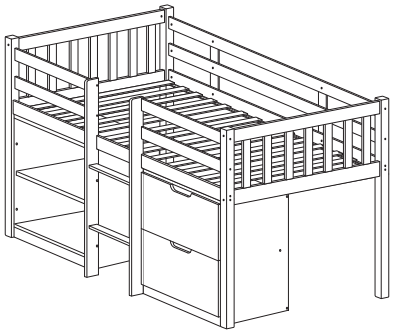

2228/SUSVILLE/010925/