ABERDEEN

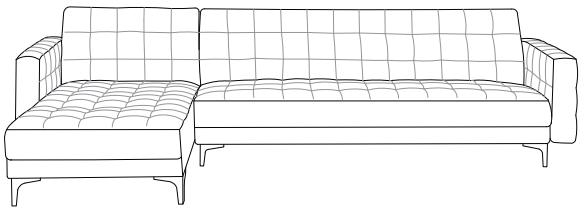

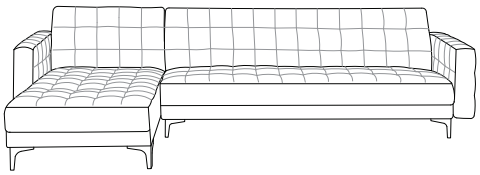

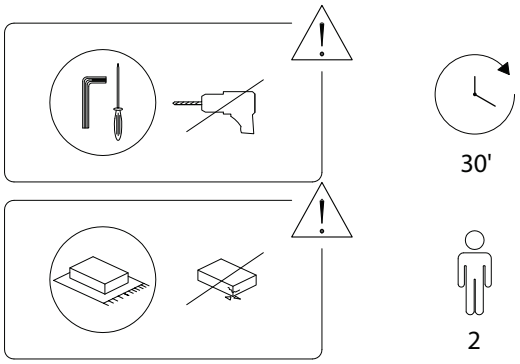

1/6

925/ABERDEEN.SET/110225/

A	B	C	D	E	F
					 M4 x 30
x 1	x 1	x 1	x 1	x 8	x 52

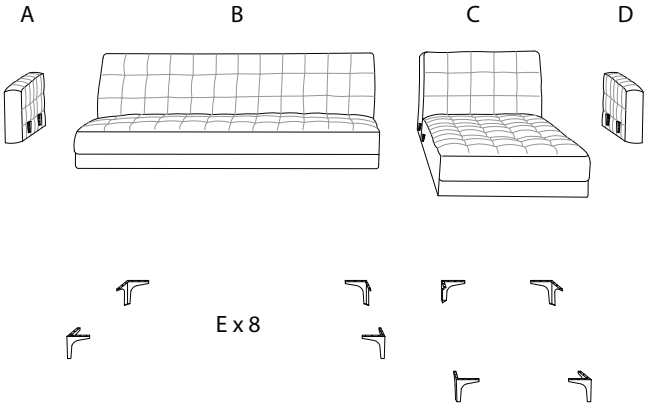

G	H	I	J	K
	 M6 x 20			
x 4	x 8	x 1	x 2	x 2

2/6

925/ABERDEEN.SET/110225/

1

B	C	F	J	K
x 1	x 1	 M4 x 30 x 20	 x 2	 x 2

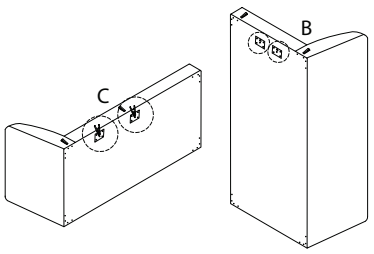

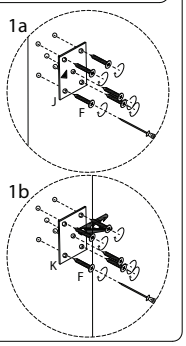

2

E	F
 x 8	 M4 x 30 x 32

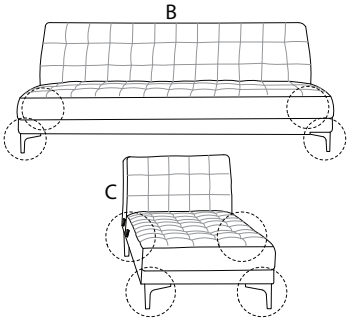

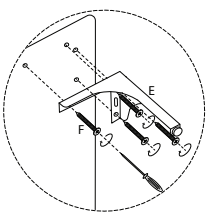

3/6

925/ABERDEEN.SET/110225/

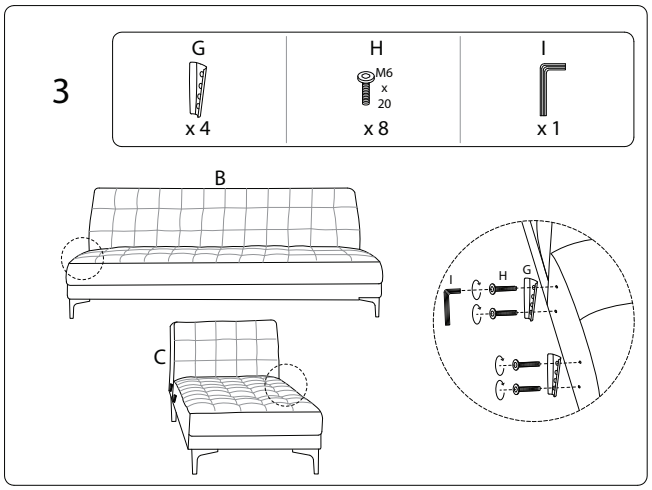
3
G
x 4
H
M6
x
20
x 8
I
x 1
B
C
H
G
I

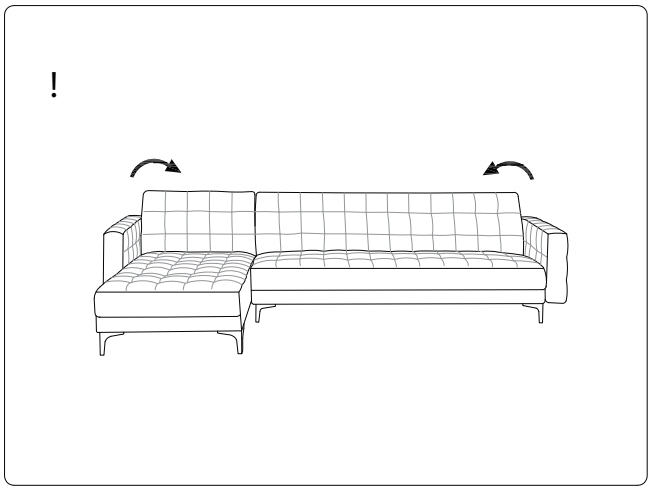
!

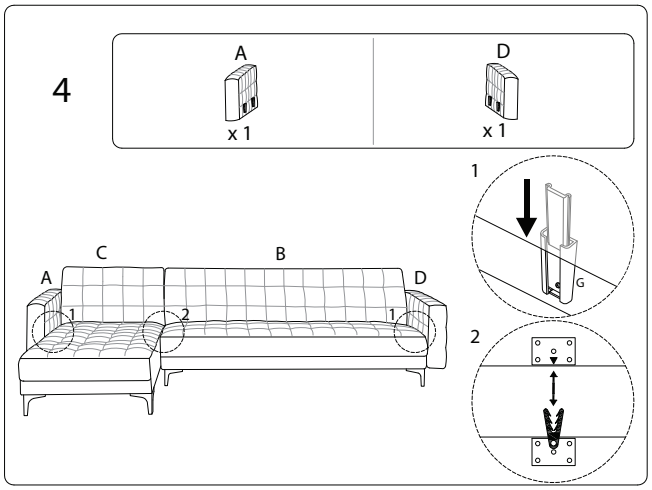
4
A
x 1
D
x 1
C
B
A
D
1
2
1
1
G
2

4/6

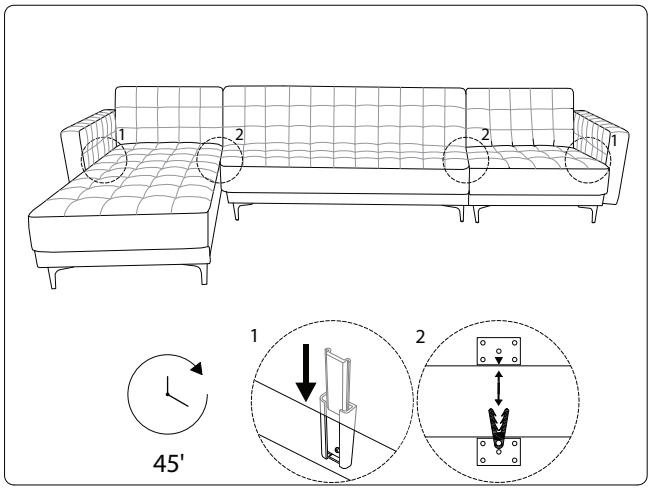
1
2
2
1
45'
1
2

5/6

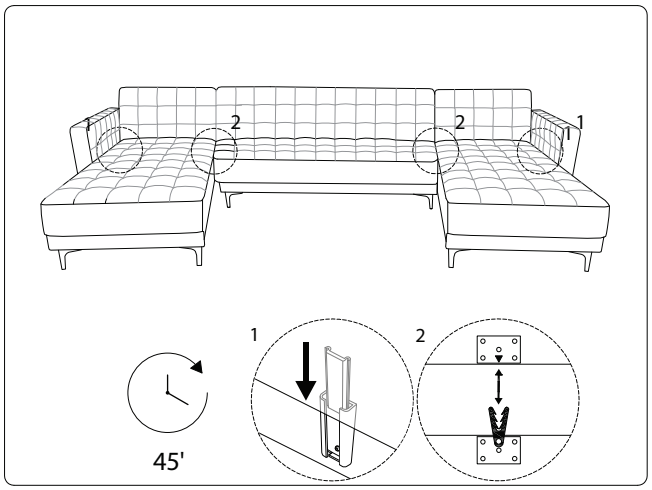
1
2
2
1
45'
1
2

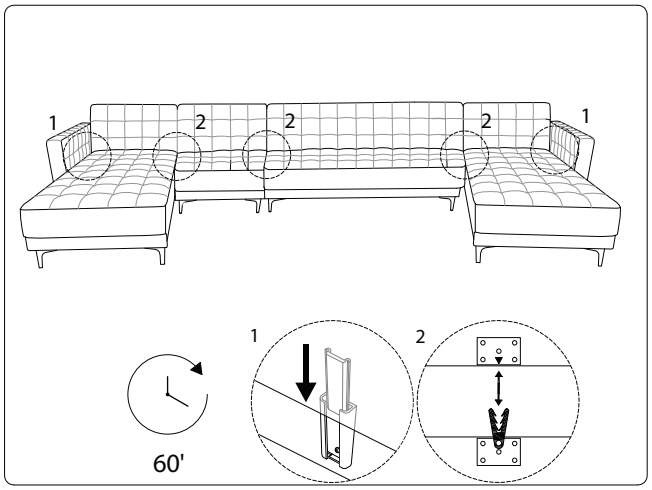
1
2
2
2
1
60'
1
2

6/6