KALFAFEL

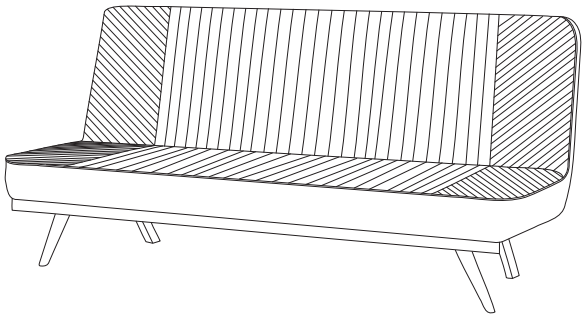

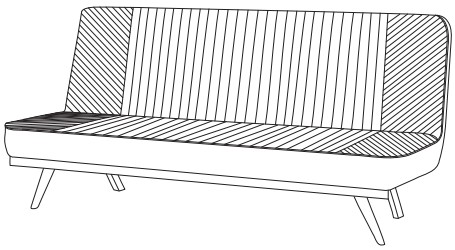

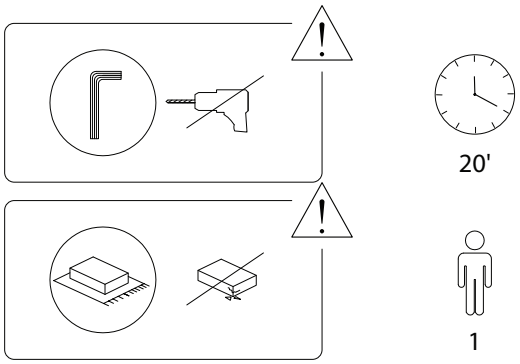

1252/KALFAFEL/040624/

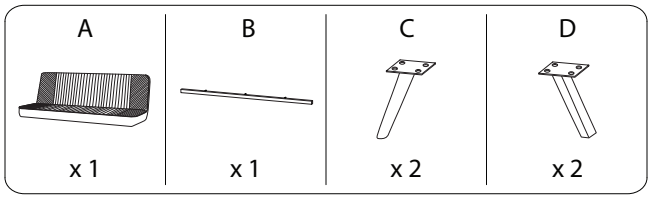

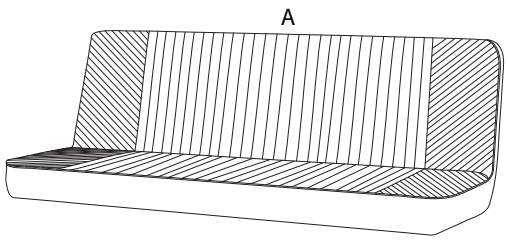

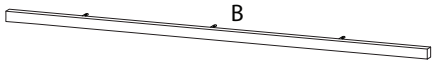



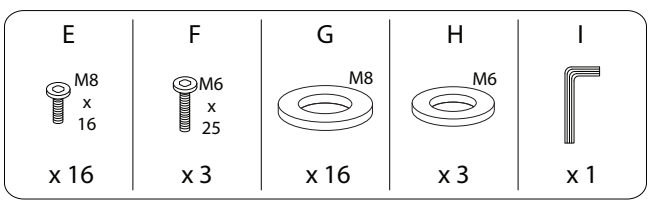

1252/KALFAFEL/040624/

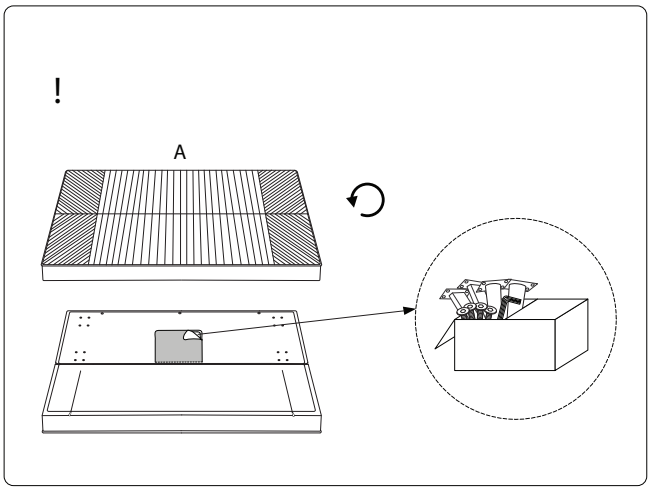

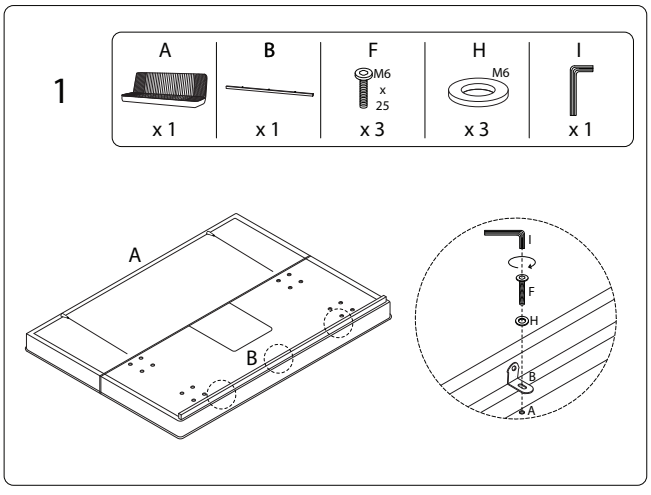

1252/KALFAFEL/040624/

2

C	D	E	G	I
x 2	x 2	M8 x 16 x 16	M8 x 16	x 1

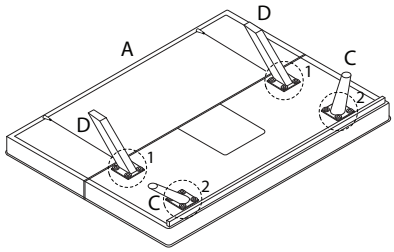

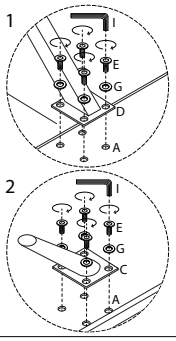

3

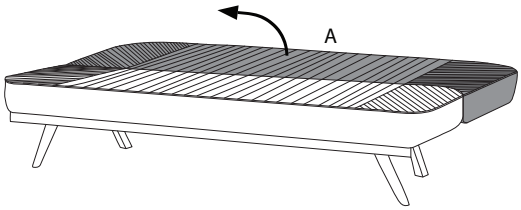

1252/KALFAFEL/040624/

!

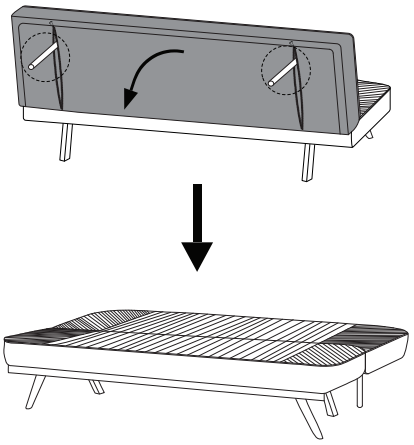

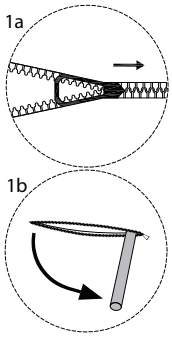

1252/KALFAFEL/040624/