FENESTRA

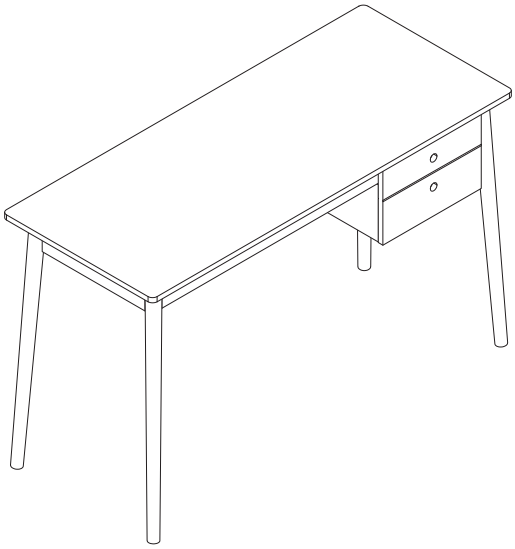

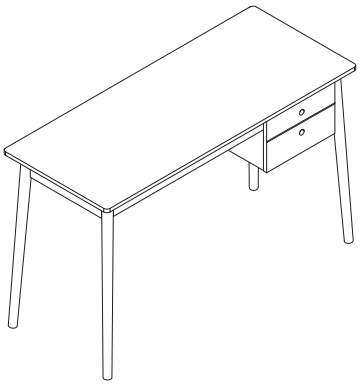

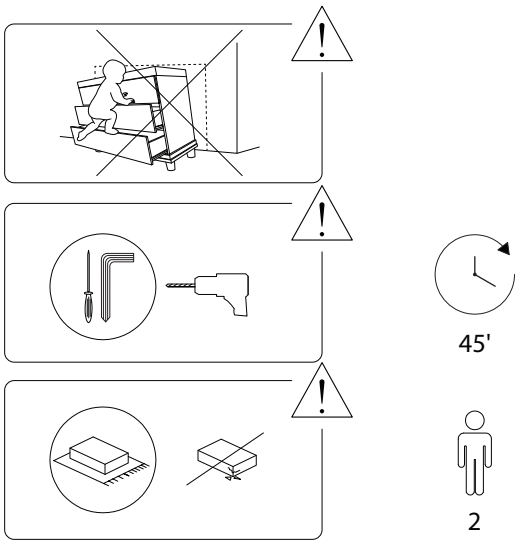
45'
2

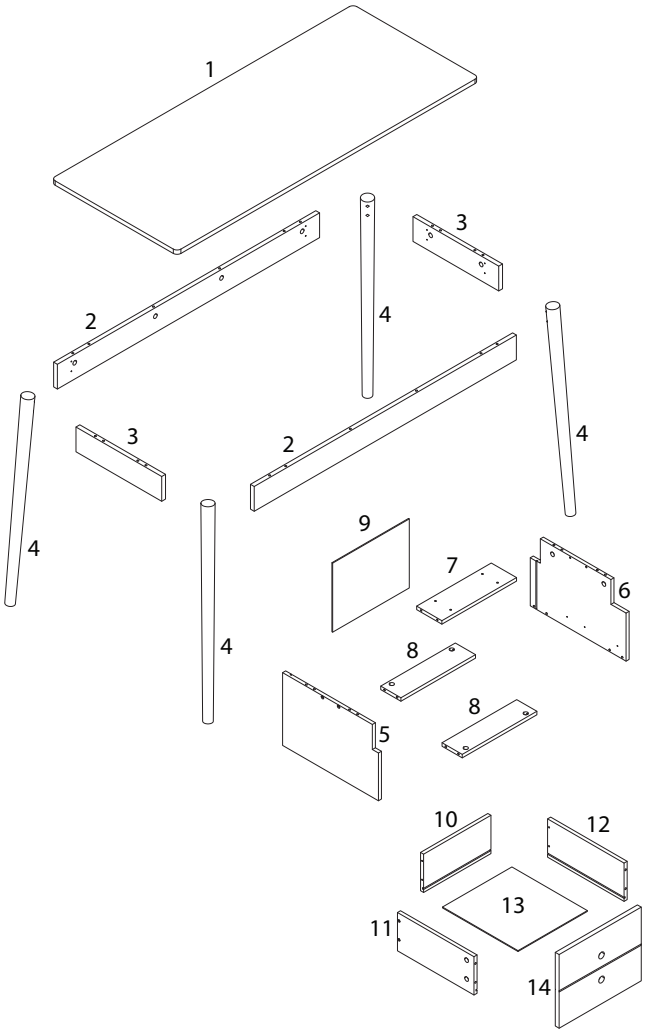
1
2
3
4
2
3
4
4
9
7
6
4
8
8
5
10
12
13
11
14

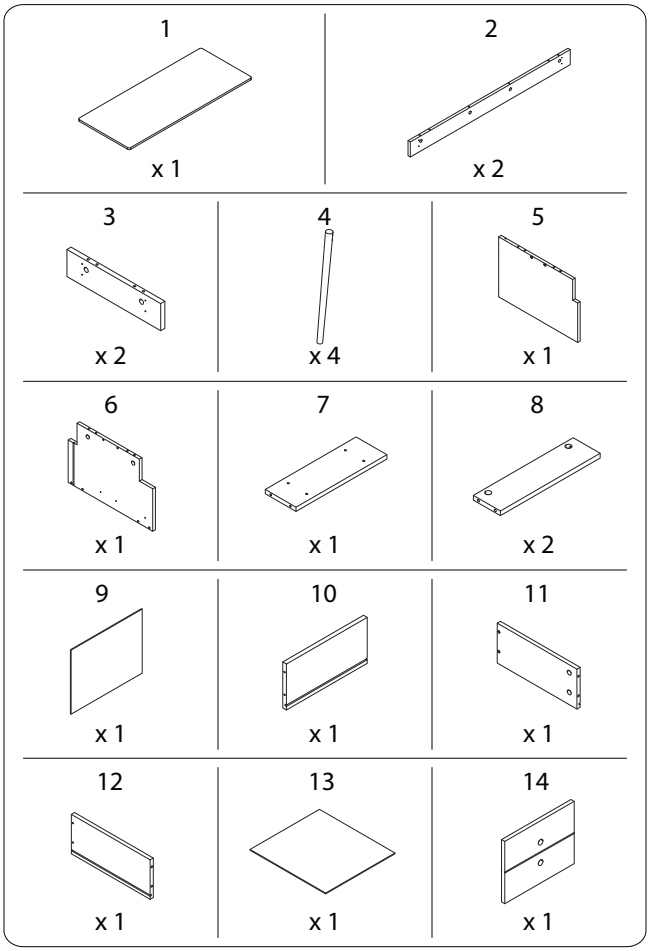
1
x 1
2
x 2
3
x 2
4
x 4
5
x 1
6
x 1
7
x 1
8
x 2
9
x 1
10
x 1
11
x 1
12
x 1
13
x 1
14
x 1

A	B	C
x 24	x 24	x 16
CL	**CR**	**D**
x 1	x 1	M4 x 35 x 9
DL	**DR**	**E**
x 1	x 1	M4 x 25 x 4
G	**H**	**I**
M4 x 12 x 16	M6 x 40 x 8	x 1
K1	**K2**	**K3**
x 2	x 1	x 1

F	J	K4
x 4	M3 x 10 x 12	M4 x 14 x 1

1

1	A
x 1	x 16

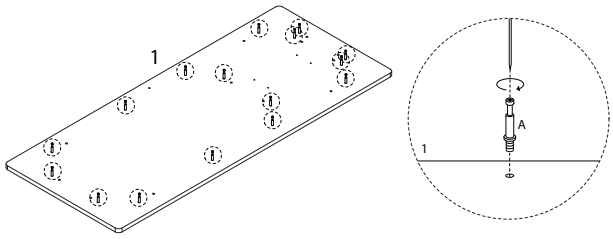

2

2	3	8	C
x 2	x 2	x 2	x 12

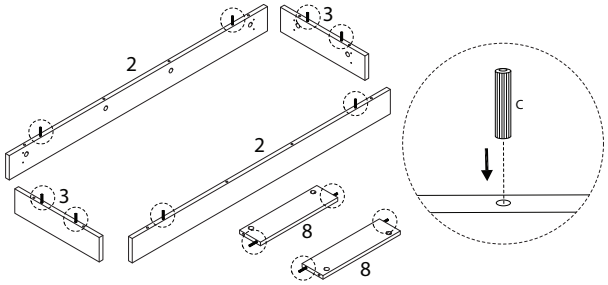

3

B
x 12

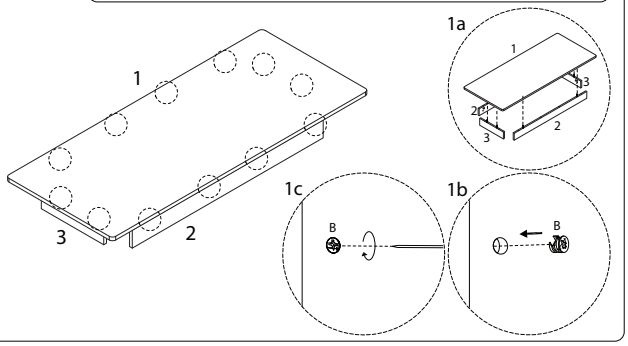

4

F	G
x 4	M4 x 12 x 16

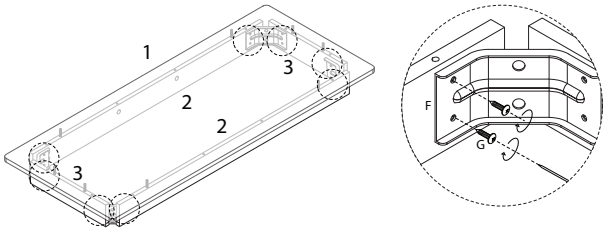

5

4	H	I
x 4	M6 x 40 x 8	x 1

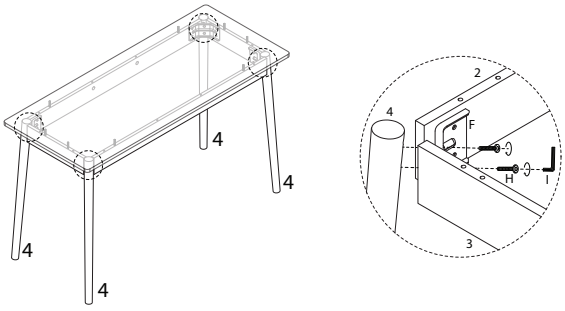

6

5	6	A	CL	CR	J
x 1	x 1	x 4	x 1	x 1	M3 x 10 x 6

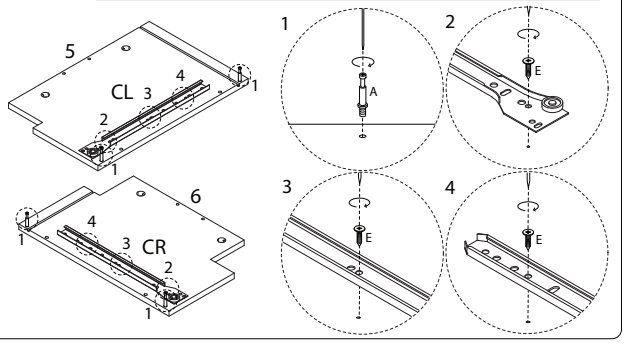

7

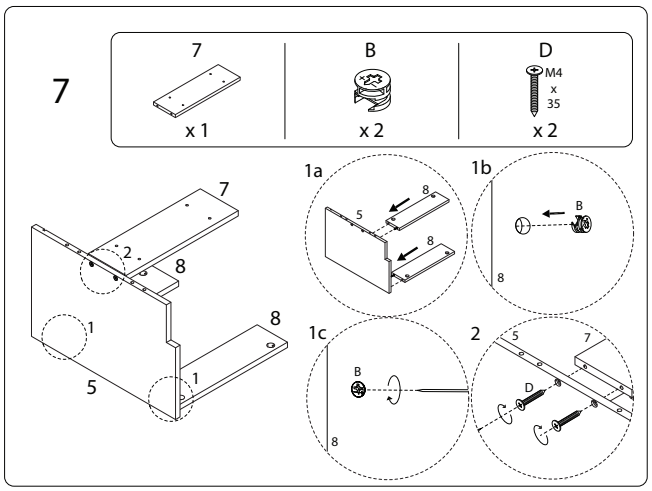

8

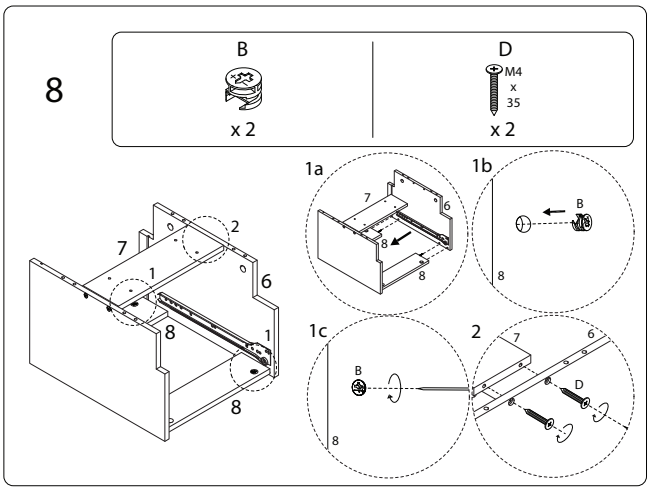

9

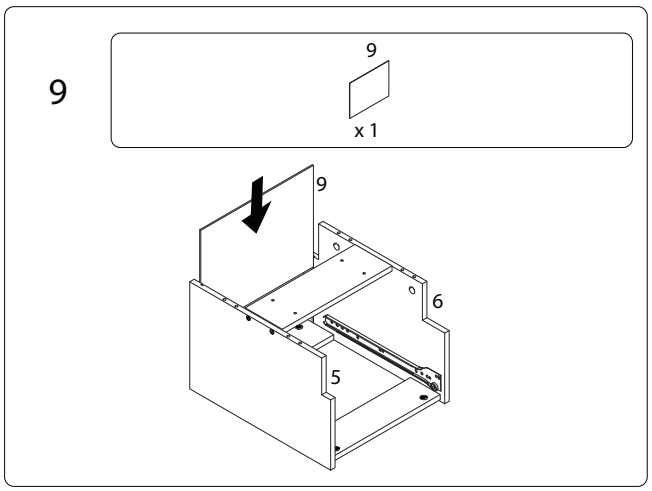

10

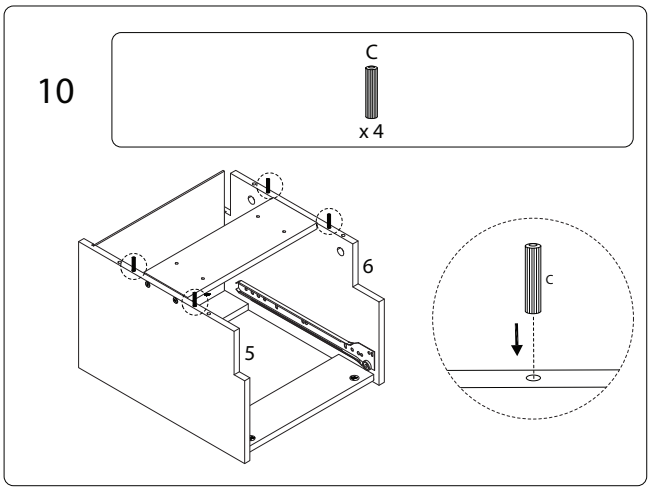

11

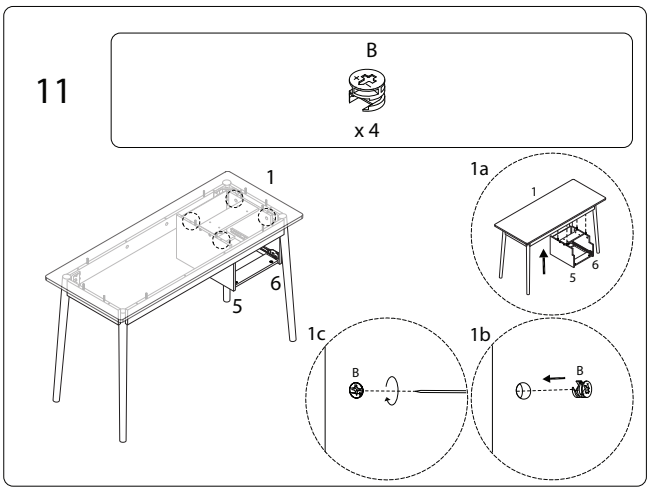

12

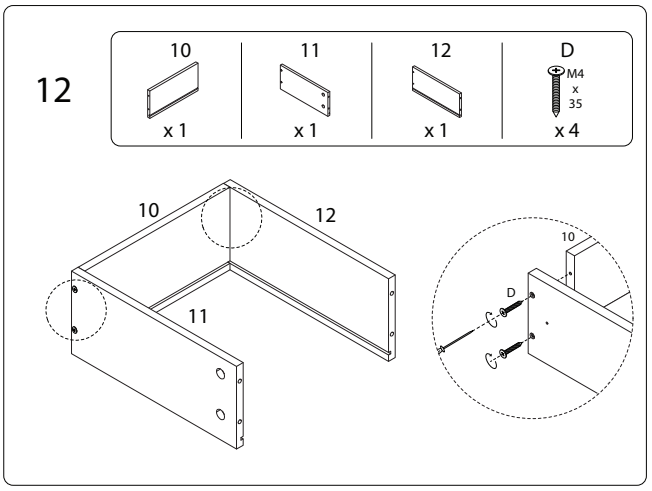

13

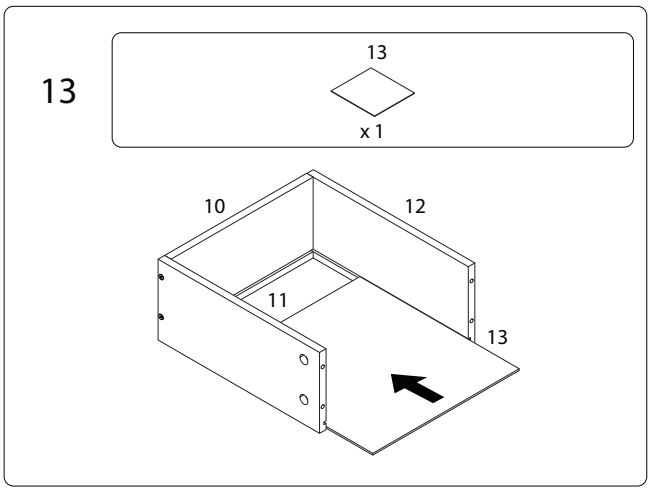

14

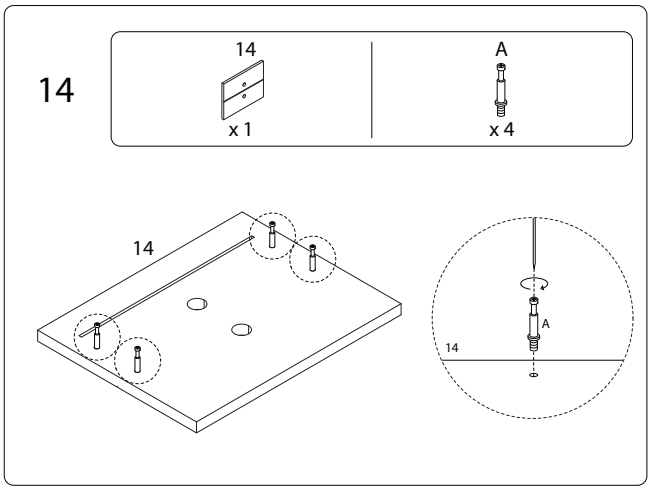

15

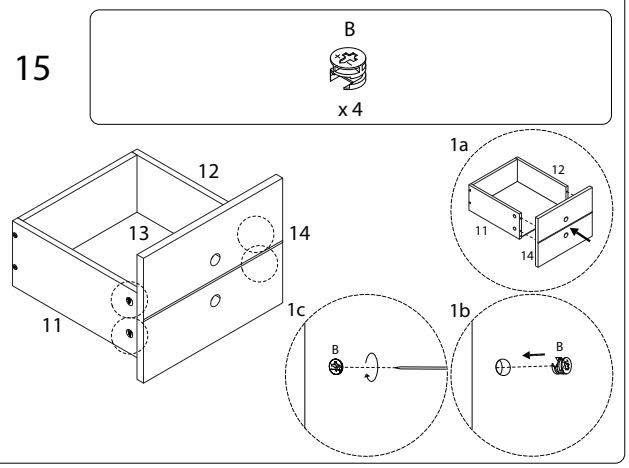
B
x 4
12
13
14
11
1a
12
11
14
1c
B
1b
B

16

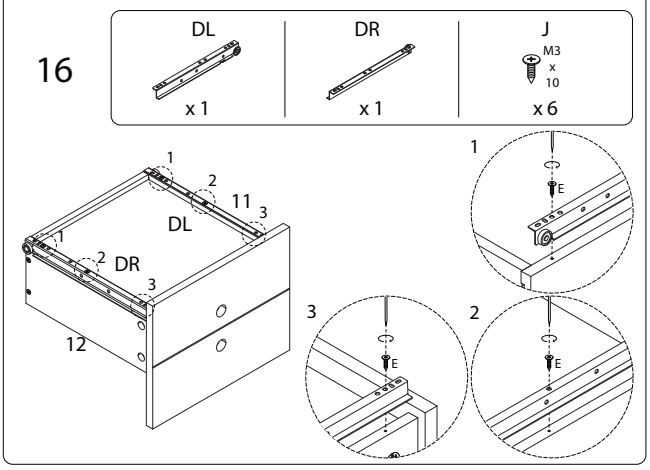
DL
x 1
DR
x 1
J
M3
x
10
x 6
1
2
11
3
DL
1
2
DR
3
12
1
E
3
E
2
E

17

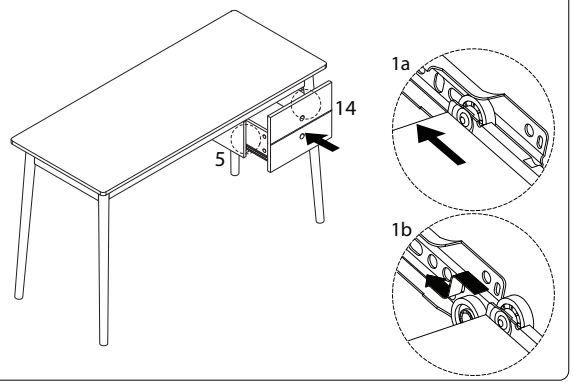
14
5
1a
1b

18

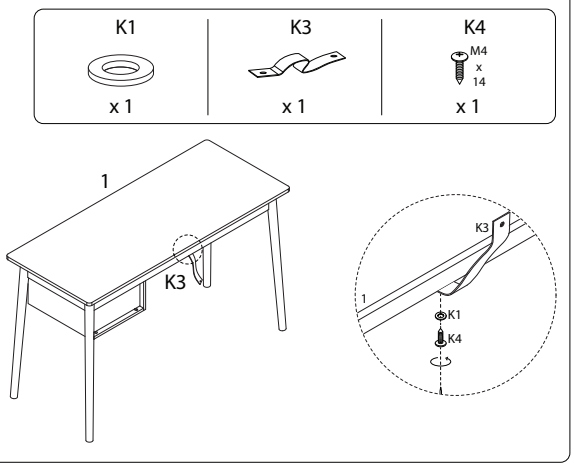
K1
x 1
K3
x 1
K4
M4
x
14
x 1
1
K3
K3
1
K1
K4

19

D
M4
x
35
x 1
K1
x 1
K2
x 1
1
1a
1b
K2
1c
K2
K3
K1
D
1