ANET

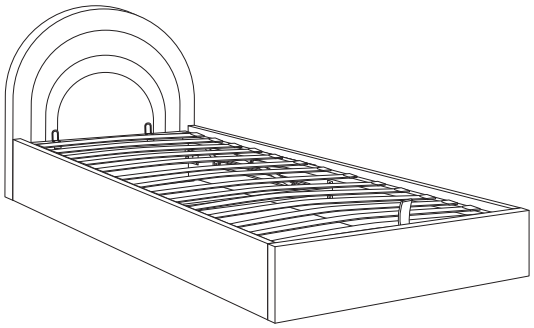

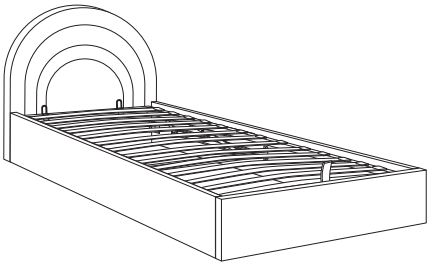

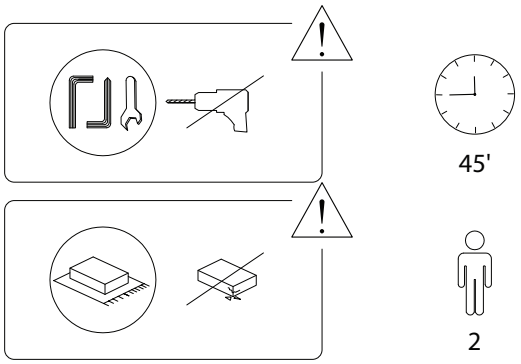

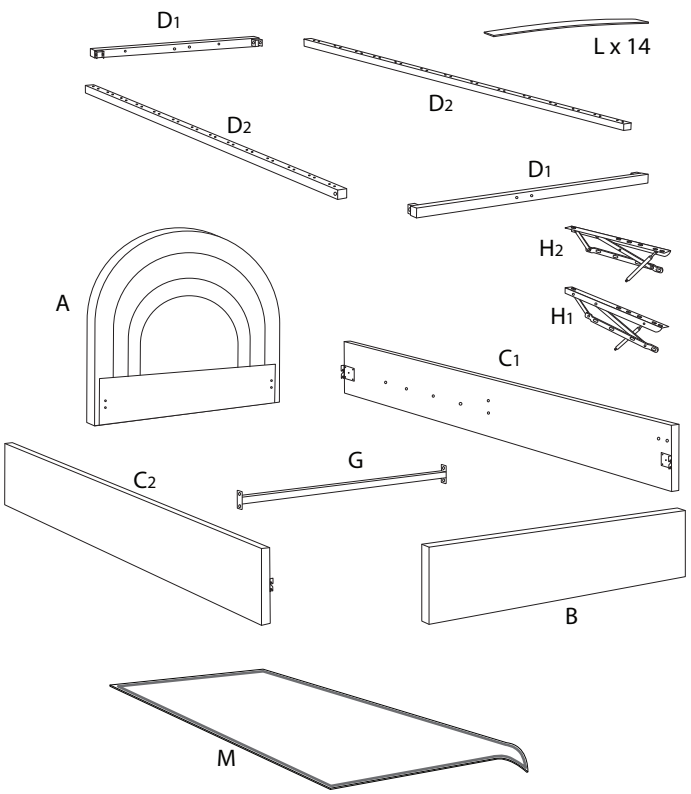

A  x 1	B  x 1	C_1 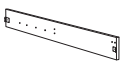 x 1	C_2  x 1
D_1 x 2	D_2 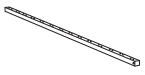 x 2	E  x 2	F  x 1
G  x 1	H_1 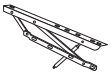 x 1	H_2  x 1	I 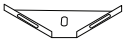 x 2
J  x 2	K 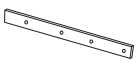 x 2	L x 14	M 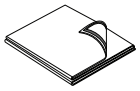 x 1
N_1  x 2	N_2 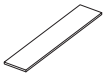 x 2	O_1 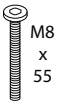 M8 x 55 x 4	O_2 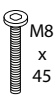 M8 x 45 x 10

O_3	P	Q
		
x 8	x 22	x 22
R	S	T
		
x 10	x 1	x 1
U	V_1	V_2
		
x 1	x 8	x 12
W	X	Y
		
x 20	x 20	x 1
	Z	
		
	x 28	

1

A	B	C_1	C_2	O_3	P	Q	S
							
x 1	x 1	x 1	x 1	x 8	x 8	x 8	x 1

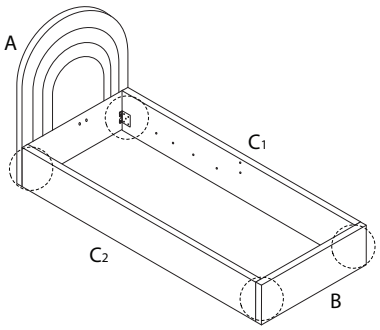

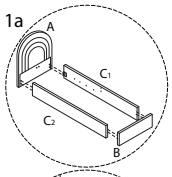

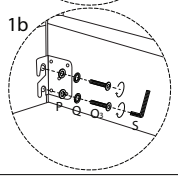

2

J	O_1	P	Q	S
				
x 2	x 4	x 4	x 4	x 1

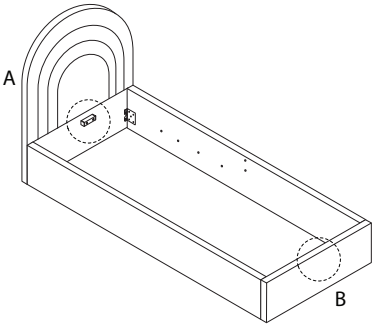

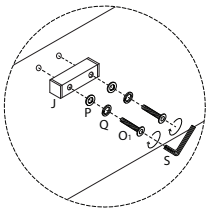

3

G	V_2	W	X	Y
				
x 1	x 4	x 4	x 4	x 1

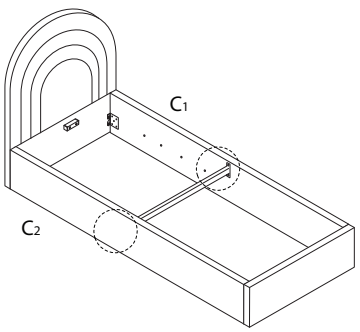

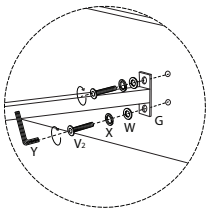

4

I	V_2	W	X	Y
				
x 2	x 8	x 8	x 8	x 1

5

H_2	K	V_1	W	X	Y
x 1	x 1	x 4	x 4	x 4	x 1

6

H_1	K	V_1	W	X	Y
x 1	x 1	x 4	x 4	x 4	x 1

7

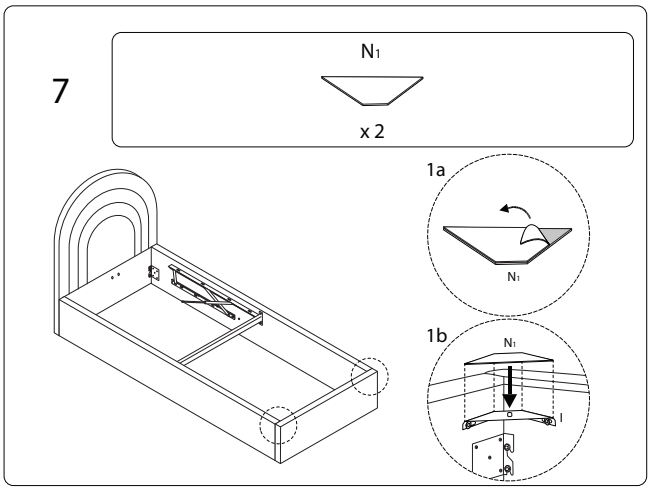

8

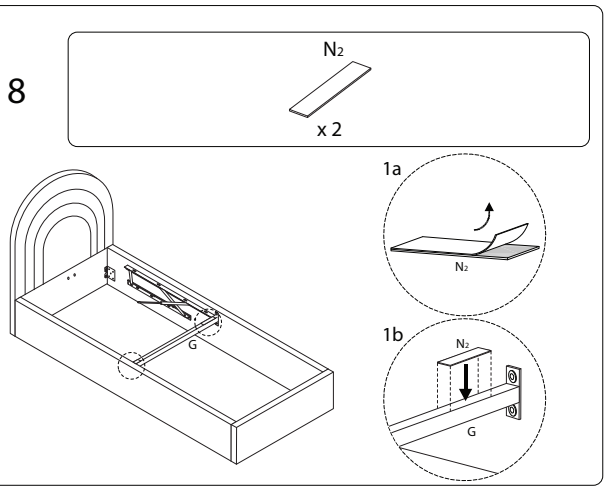

9

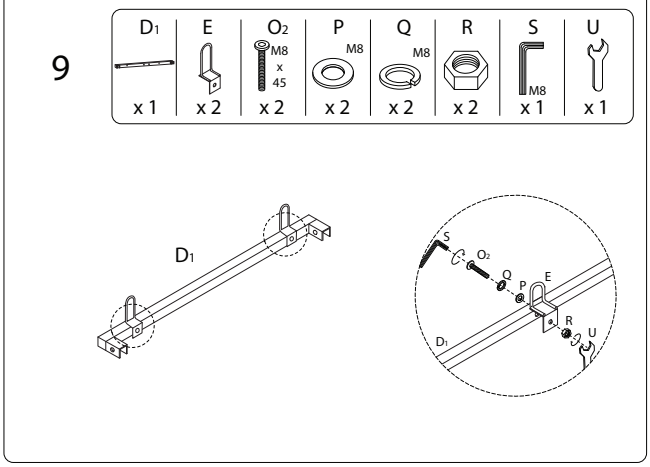

10

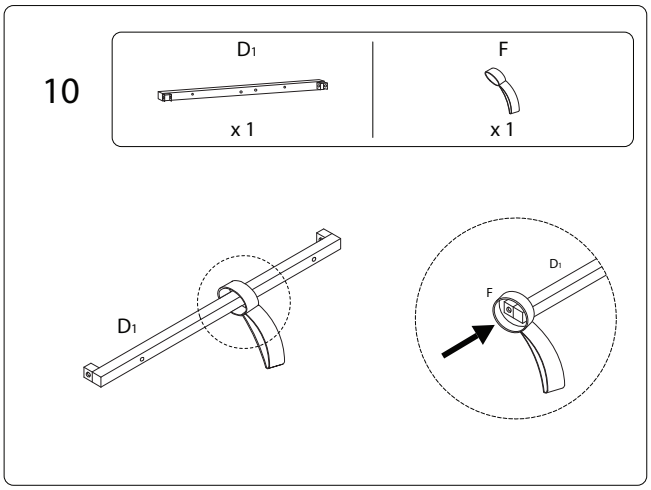

11

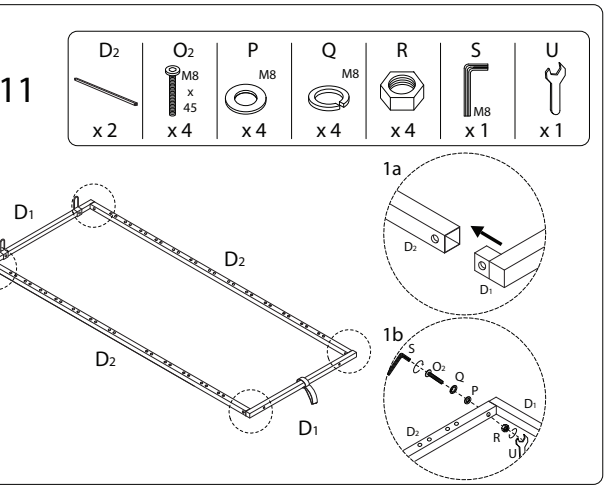

12

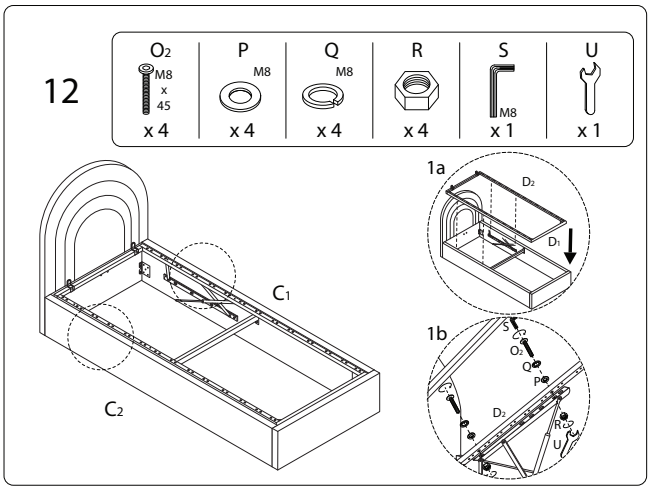

13 x 14

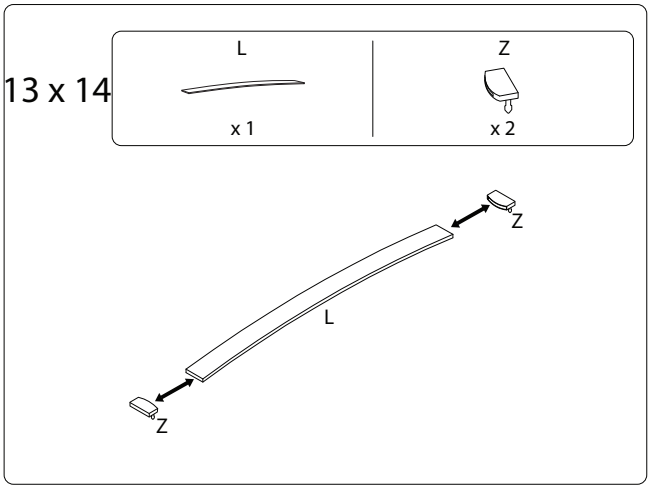

!

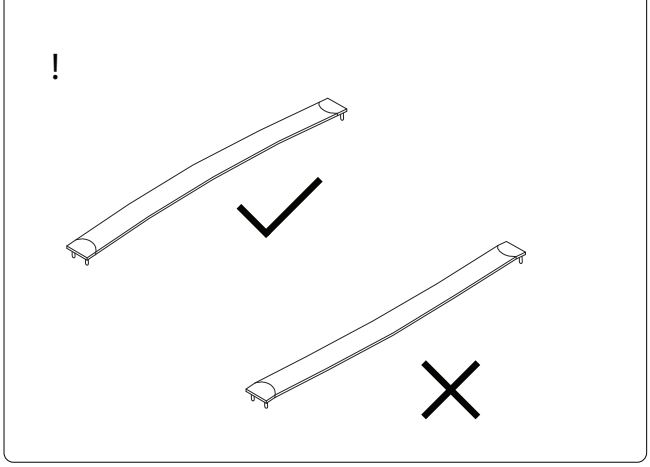

14

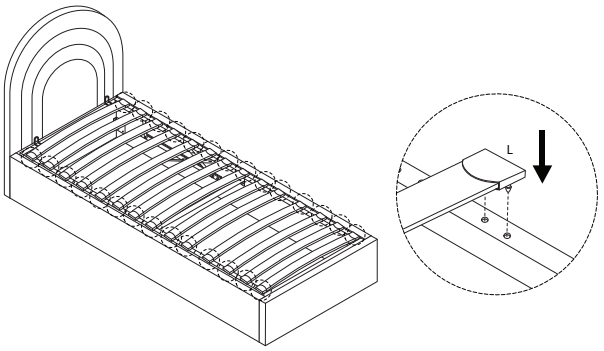

15

T

x 1

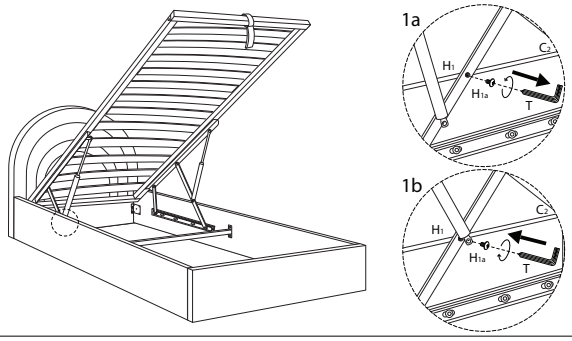

16

T

x 1

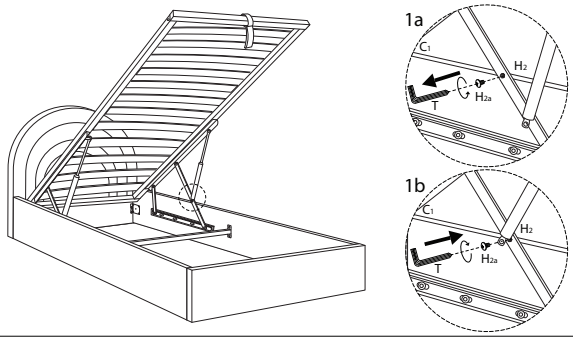

17

M

x 1

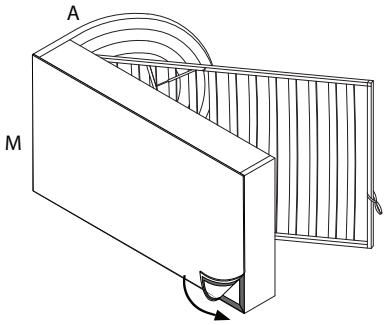

751/ANET/040424/

751/ANET/040424/