RATANA

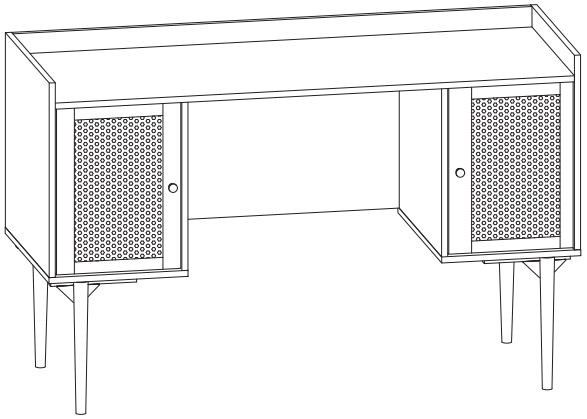

1/14

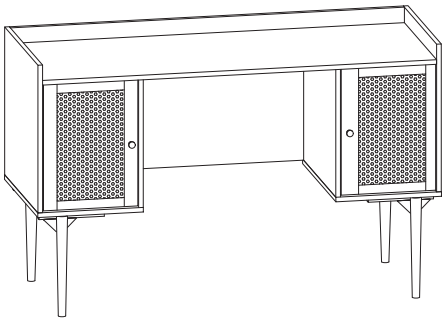

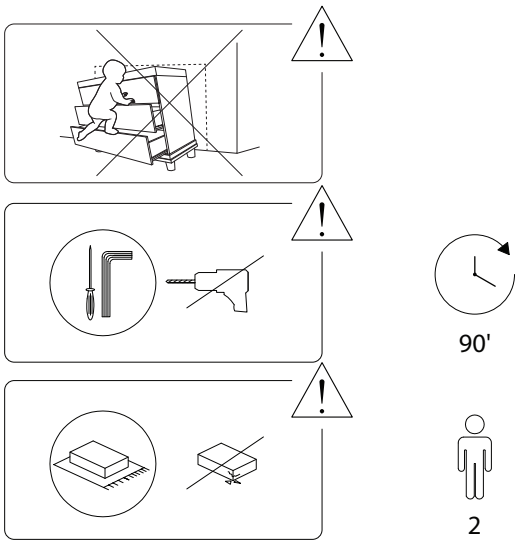

2/14

2838/RATANA/200526

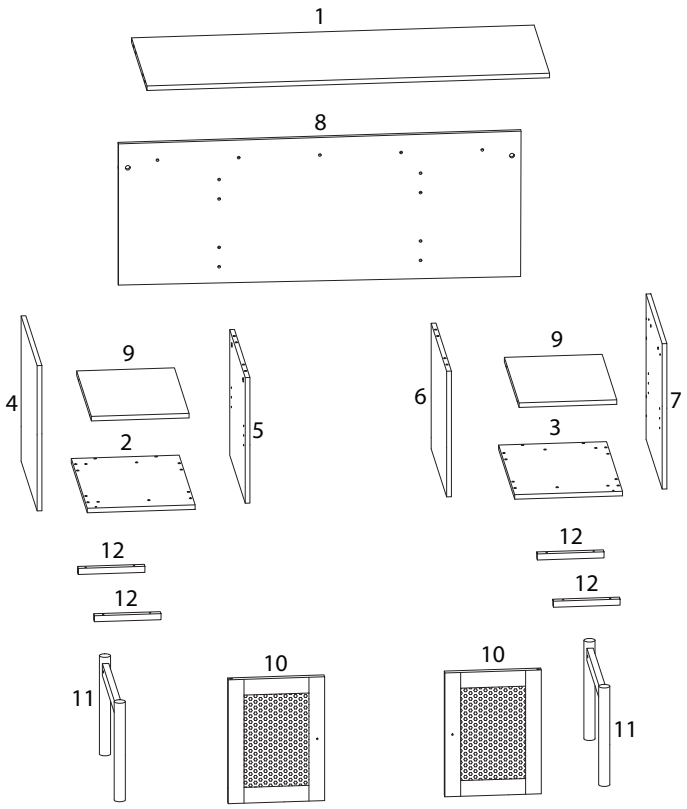

3/14

1  x 1	2 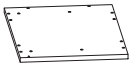 x 1	3 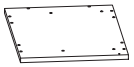 x 1
4  x 1	5  x 1	6  x 1
7  x 1	8 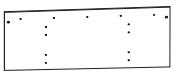 x 1	
9  x 2	10 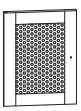 x 2	
11  x 2	12  x 4	

4/14

2838/RATANA/200526

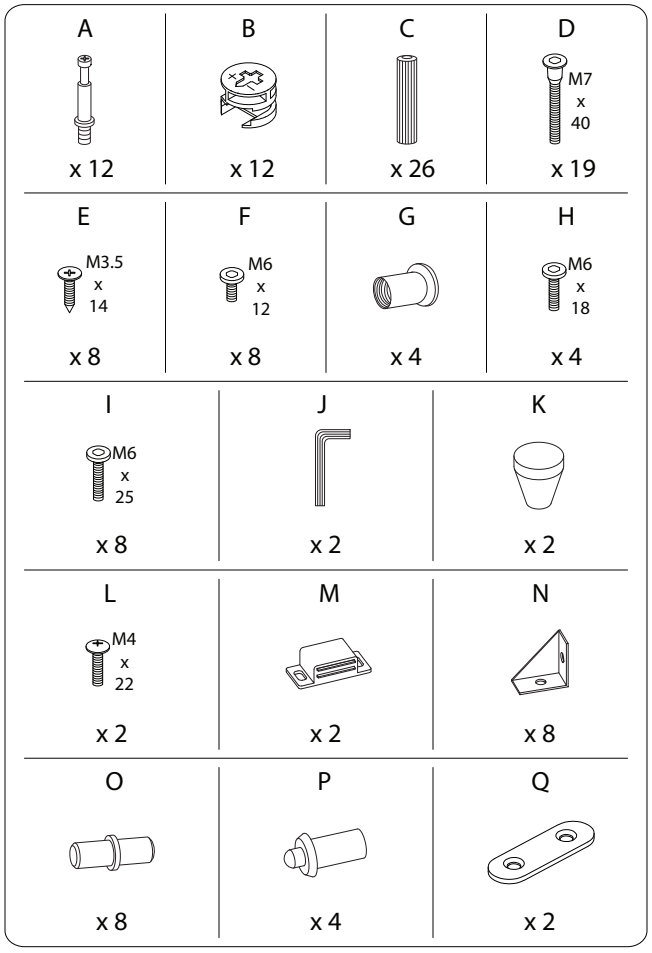
A
x 12
B
x 12
C
x 26
D
M7 x 40
x 19
E
M3.5 x 14
x 8
F
M6 x 12
x 8
G
x 4
H
M6 x 18
x 4
I
M6 x 25
x 8
J
x 2
K
x 2
L
M4 x 22
x 2
M
x 2
N
x 8
O
x 8
P
x 4
Q
x 2

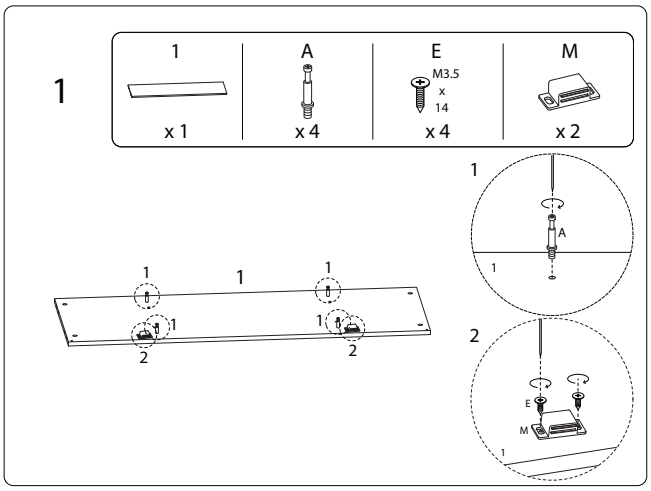
1
1
x 1
A
x 4
E
M3.5 x 14
x 4
M
x 2
1
A
1
2
E
M
1

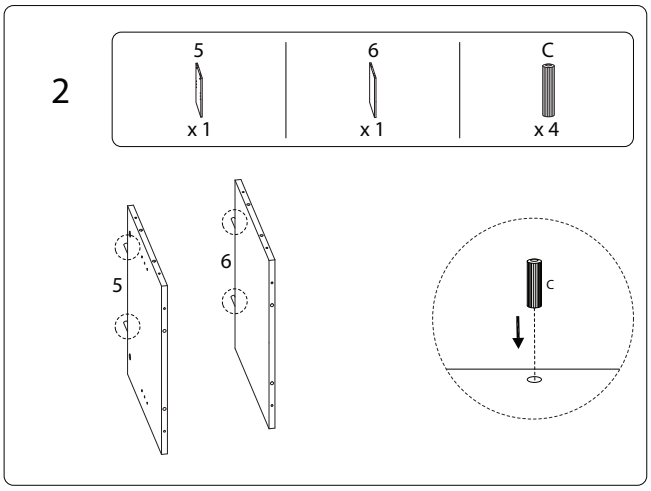
2
5
x 1
6
x 1
C
x 4
5
6
C

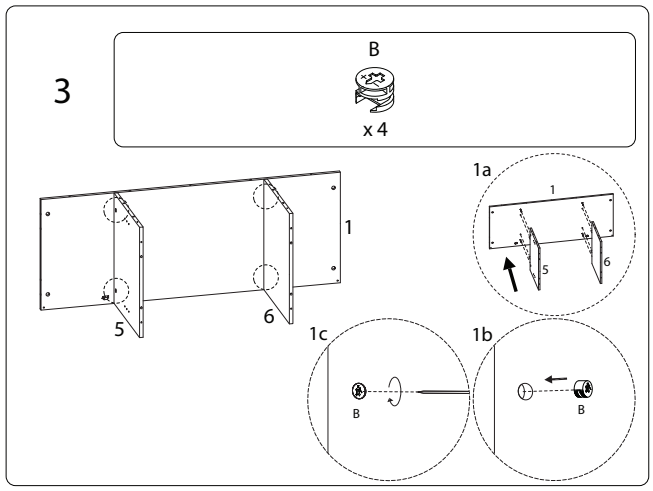
3
B
x 4
1
5
6
1a
1
5
6
1c
1b
B
B

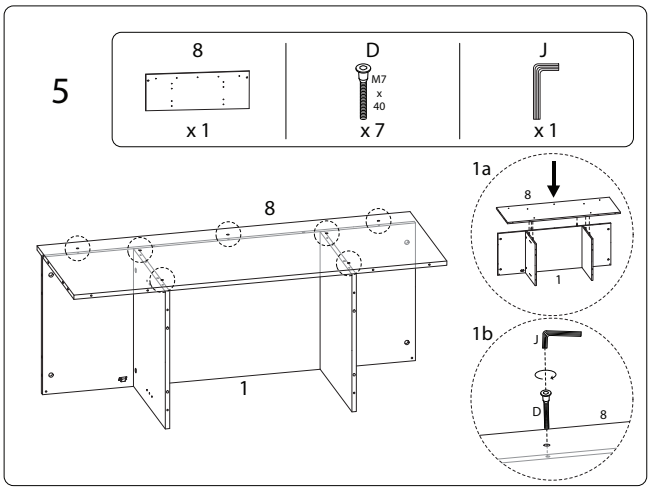
5
8
x 1
D
M7 x 40
x 7
J
x 1
8
1
1a
8
1
1b
J
D
8

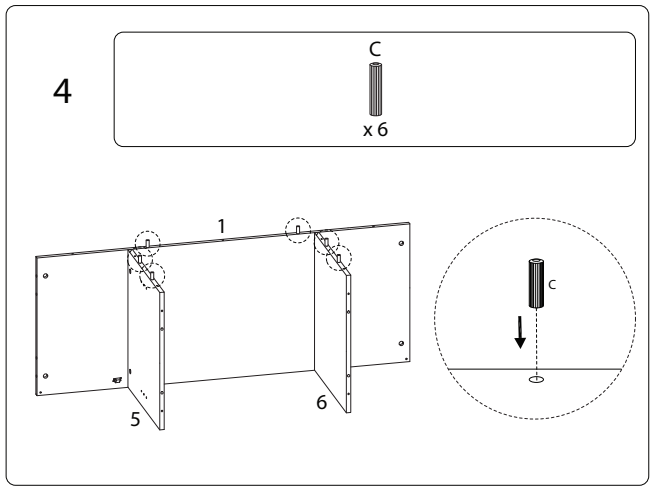
4
C
x 6
1
5
6
C

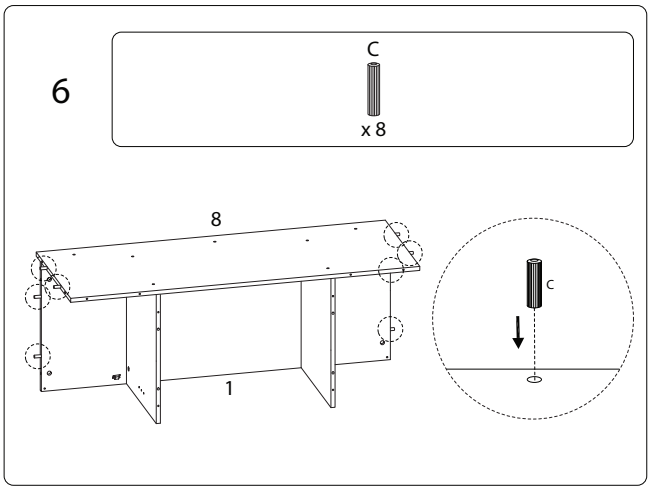
6
C
x 8
8
1
C

7

4 x 1 | 7 x 1 | A x 8

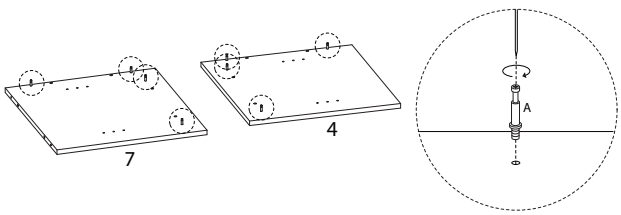

8

B x 4

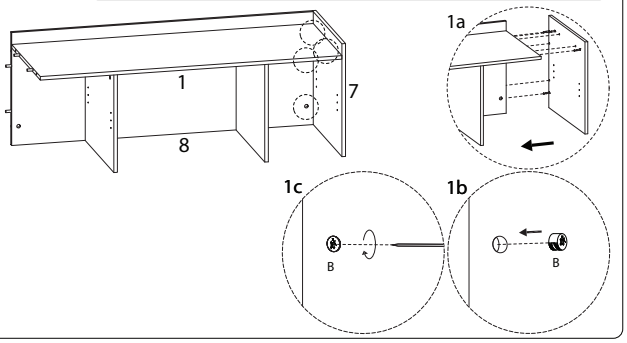

9

B x 4

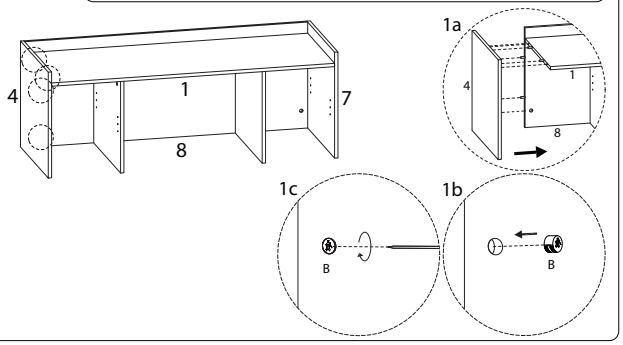

10

2 x 1 | 3 x 1 | 12 x 4 | I M6 x 25 x 8 | J x 1

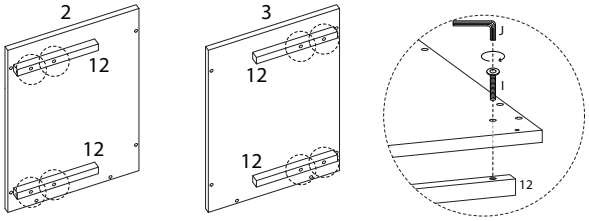

11

C x 8

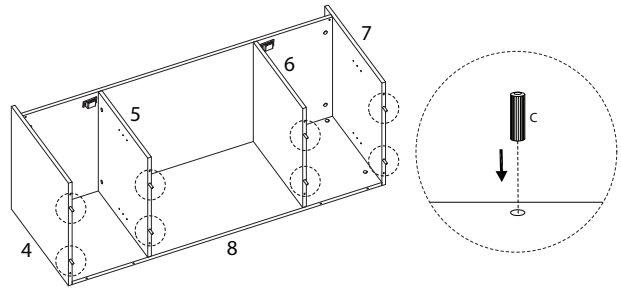

12

D M7 x 40 x 12 | J x 1

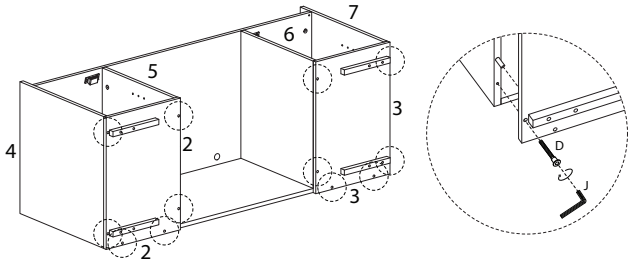

13 x 2

11 x 1 | G x 2 | H M6 x 18 x 2 | J x 2 | N x 4

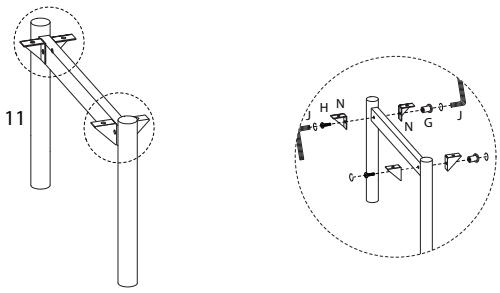

14

F M6 x 12 x 8 | J x 1

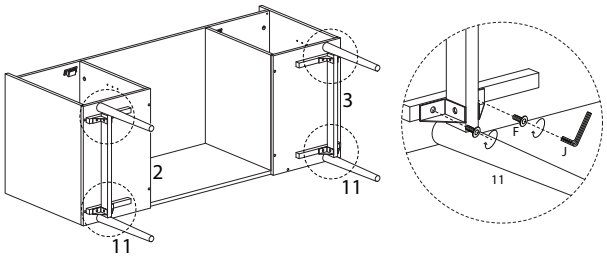

15

O

x 8

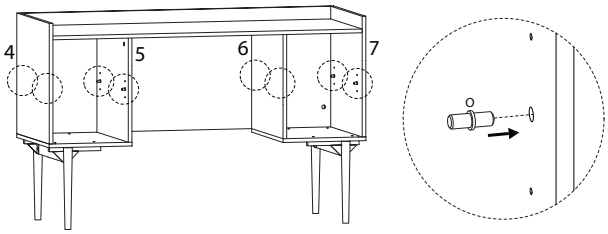

16

9

x 2

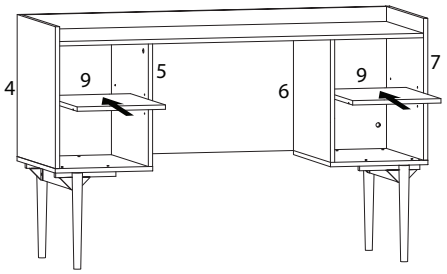

2838/RATANA/200526

17

10	E	K	L	P	Q
x 2	M3.5 x 14 x 4	x 2	M4 x 22 x 2	x 4	x 2

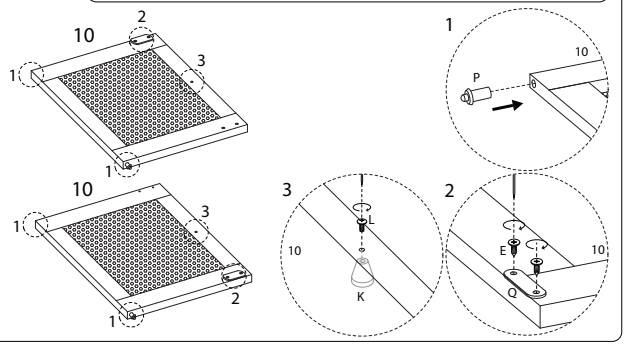

18

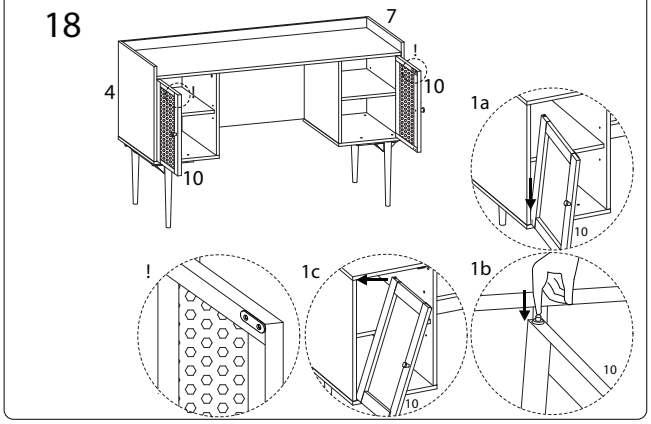

2838/RATANA/200526