SOLARI

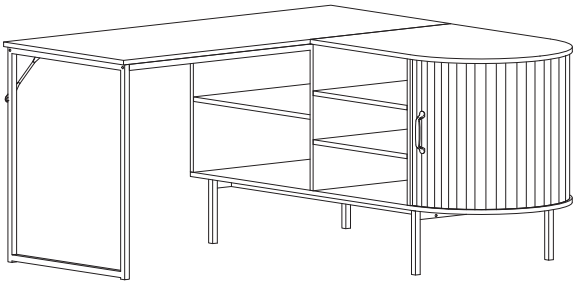

1/18

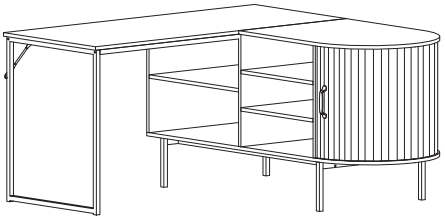

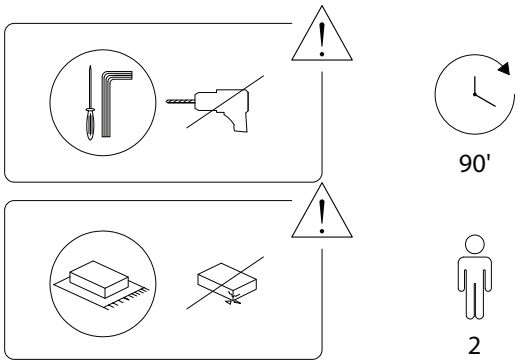

2/18

2838/SOLARI/200526

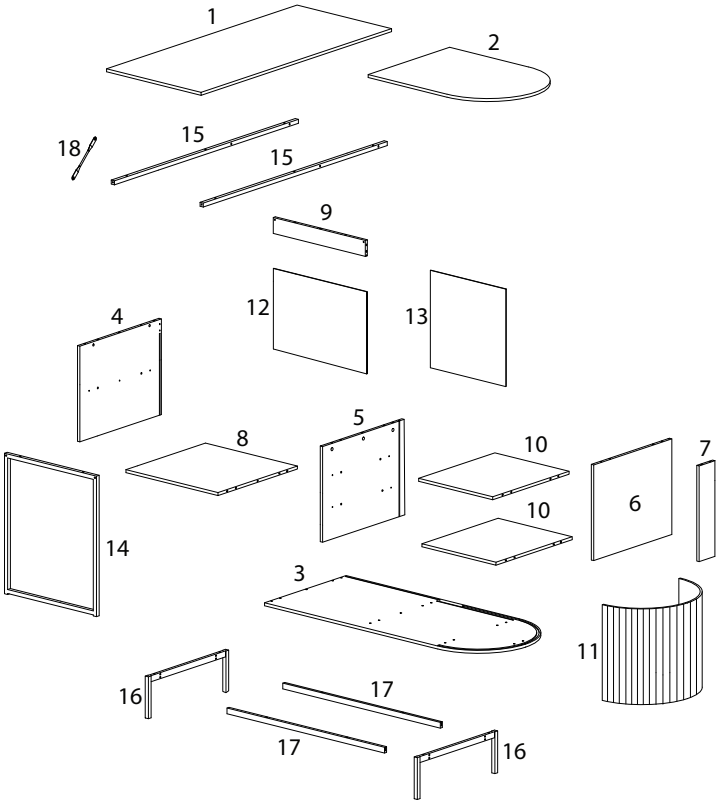

3/18

1  x 1	2  x 1	3  x 1	4 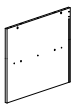 x 1
5 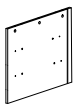 x 1	6 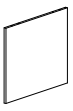 x 1	7  x 1	8  x 1
9 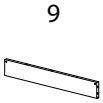 x 1	10 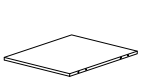 x 2	11 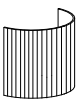 x 1	12 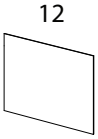 x 1
13 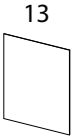 x 1	14 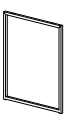 x 1	15  x 2	
16 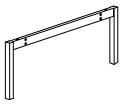 x 2	17  x 2	18  x 1	

4/18

2838/SOLARI/200526

A	B	C
x 30	x 30	x 10
D	E	F
x 25	x 20	x 12
G	H	I
x 2	x 2	x 1
J	K	
x 1	x 1	

!

2	3	K
x 1	x 1	x 1

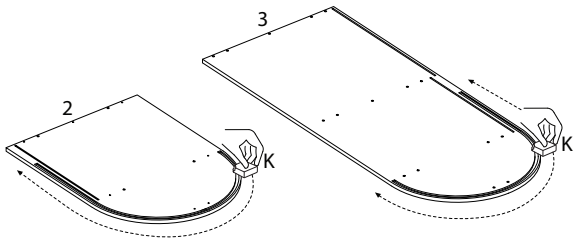

1

4	5	6	A
x 1	x 1	x 1	x 18

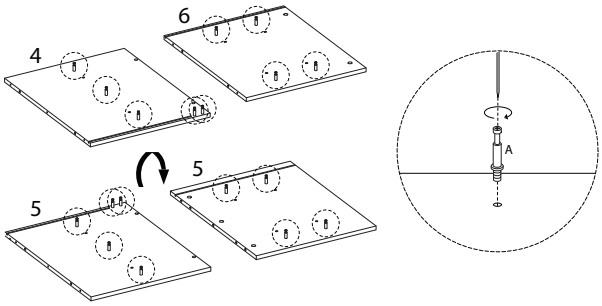

2

8	10	D
x 1	x 2	x 12

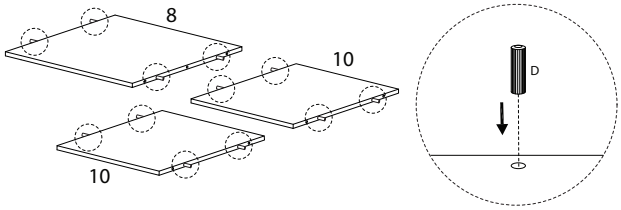

4

B
x 5

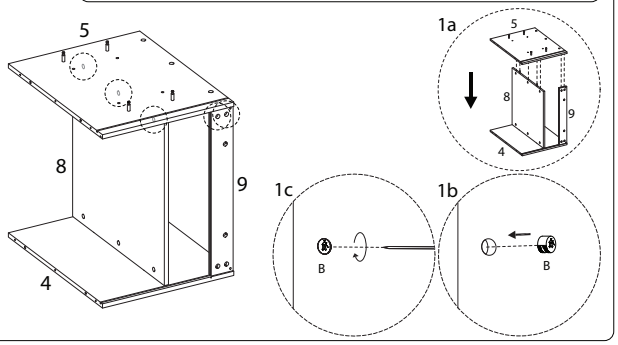

3

9	B
x 1	x 5

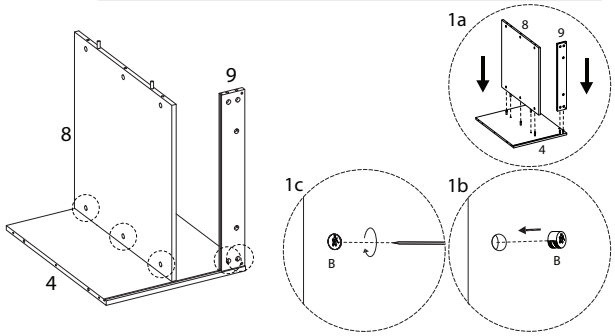

5

B
x 4

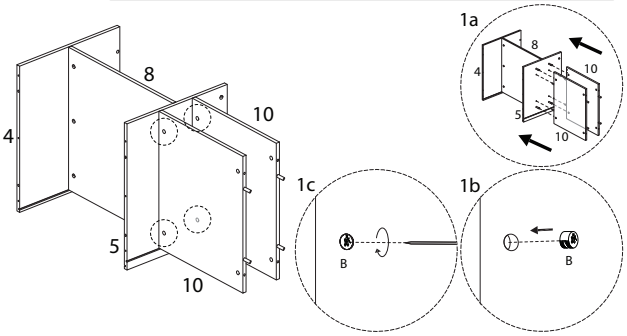

6

B

x 4

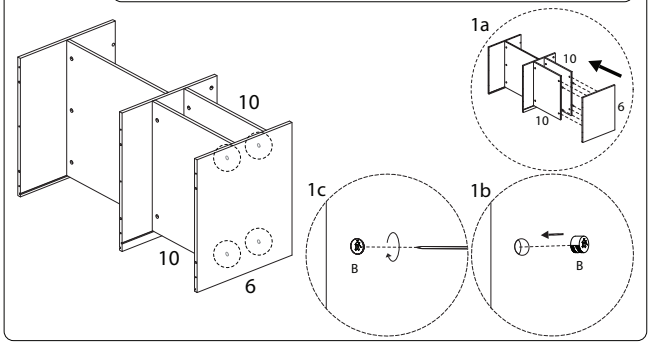

8

D

x 6

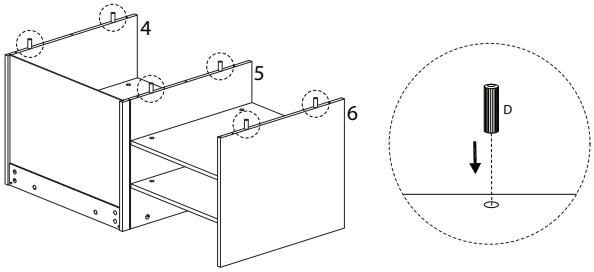

7

12

x 1

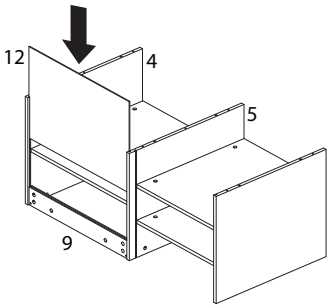

9

C

M7 x 40

x 8

J

x 1

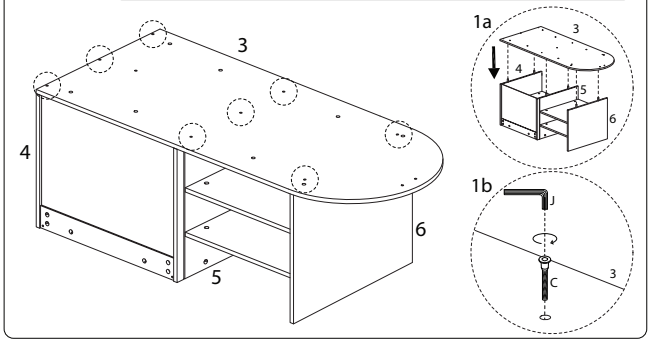

10

16

x 2

17

x 2

E

M6 x 40

x 8

J

x 1

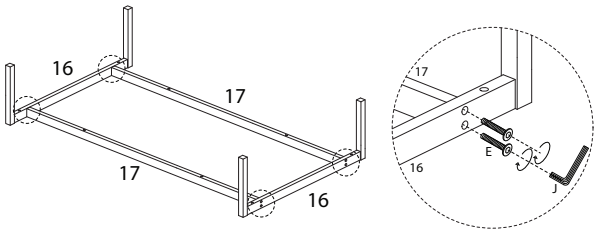

12

14

x 1

15

x 2

18

x 1

E

M6 x 40

x 2

G

M6 x 10

x 2

J

x 1

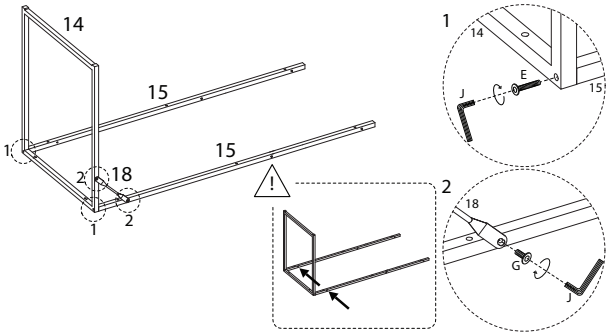

11

E

M6 x 40

x 8

J

x 1

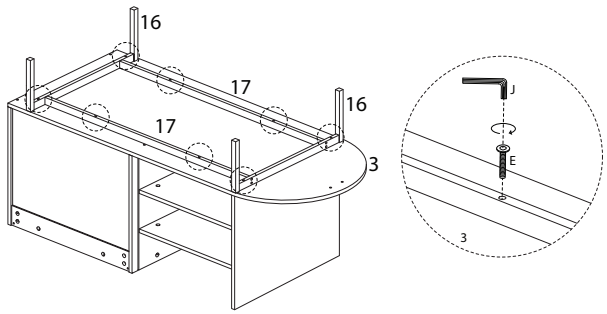

13

E

M6 x 40

x 2

F

M6 x 30

x 4

J

x 1

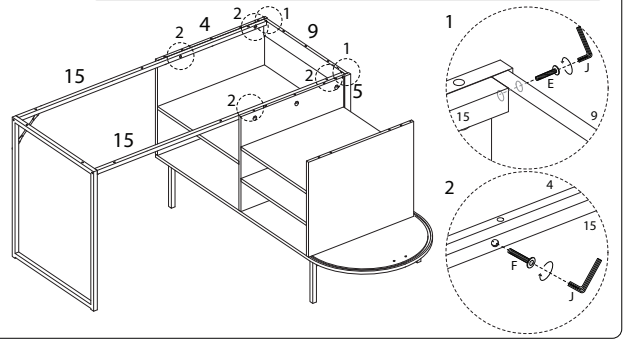

14

D
x 7

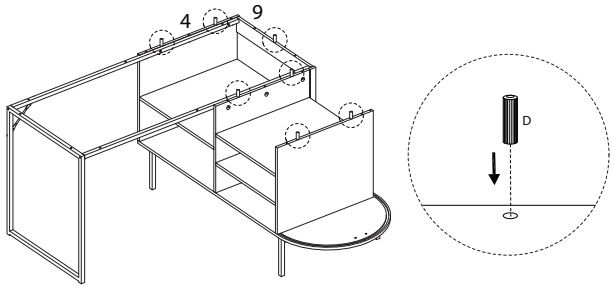

15

1
x 1

A
x 12

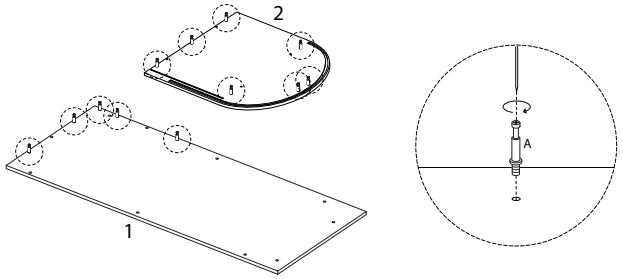

16

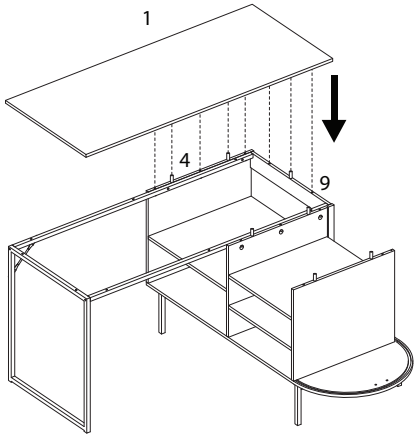

17

B
x 5

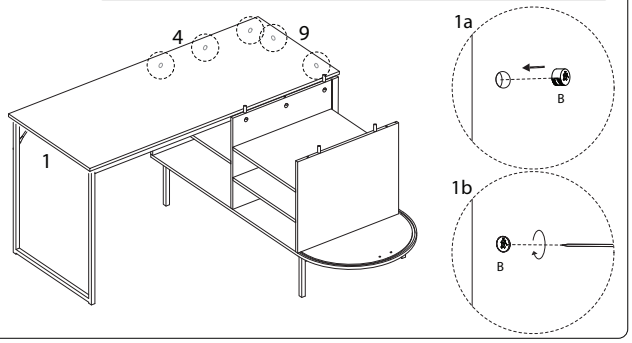

18

F
M6
x
30
x8

J
x 1

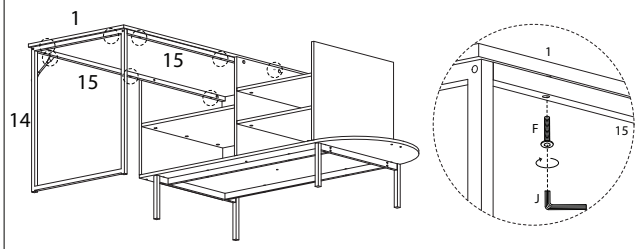

19

7
x 1

C
M7
x
40
x 2

J
x 1

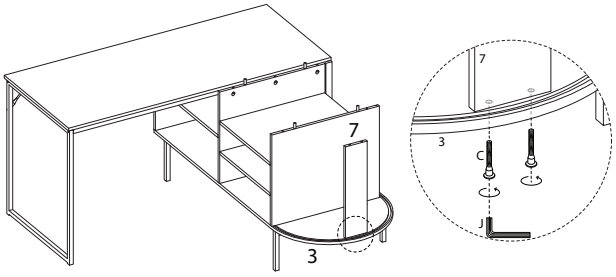

20

13
x 1

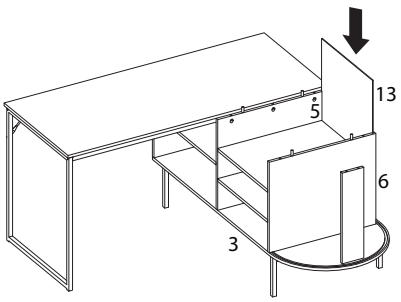

21

11
x 1

H
M4
x
12
x 2

I
x 1

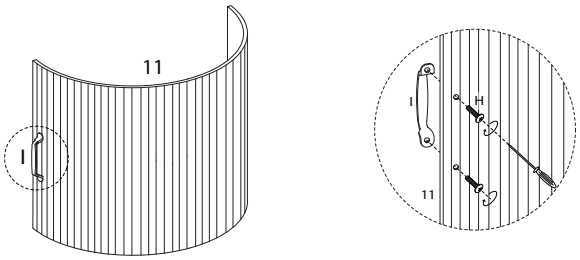

22

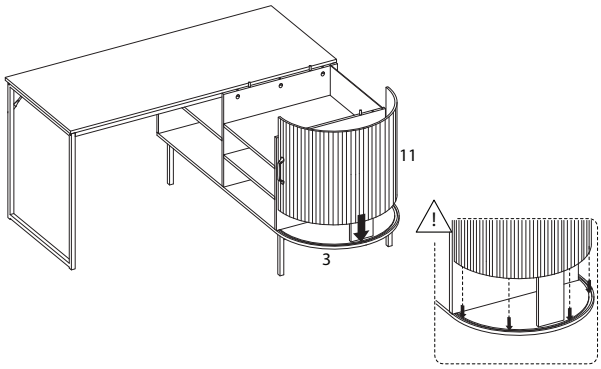

23

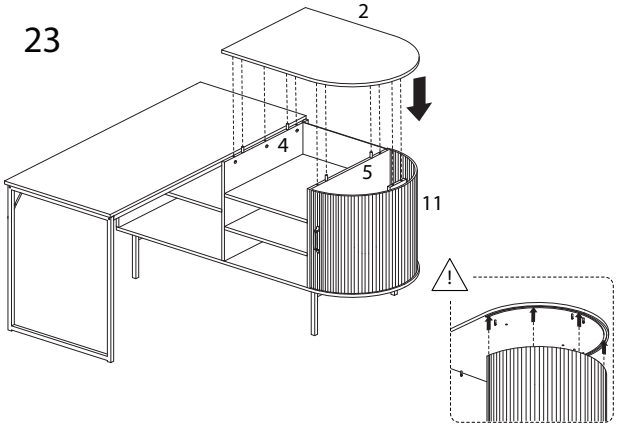

24

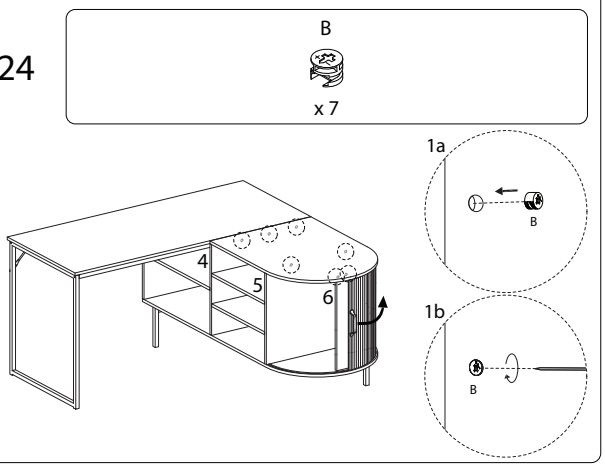

25

