LAMAR





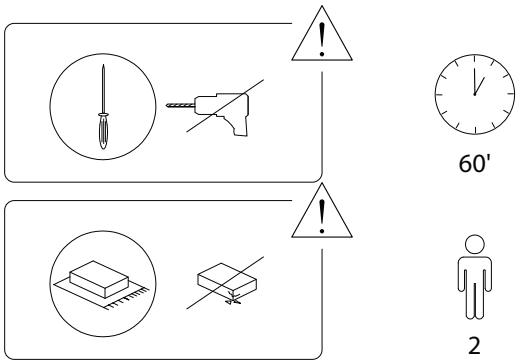

1/22

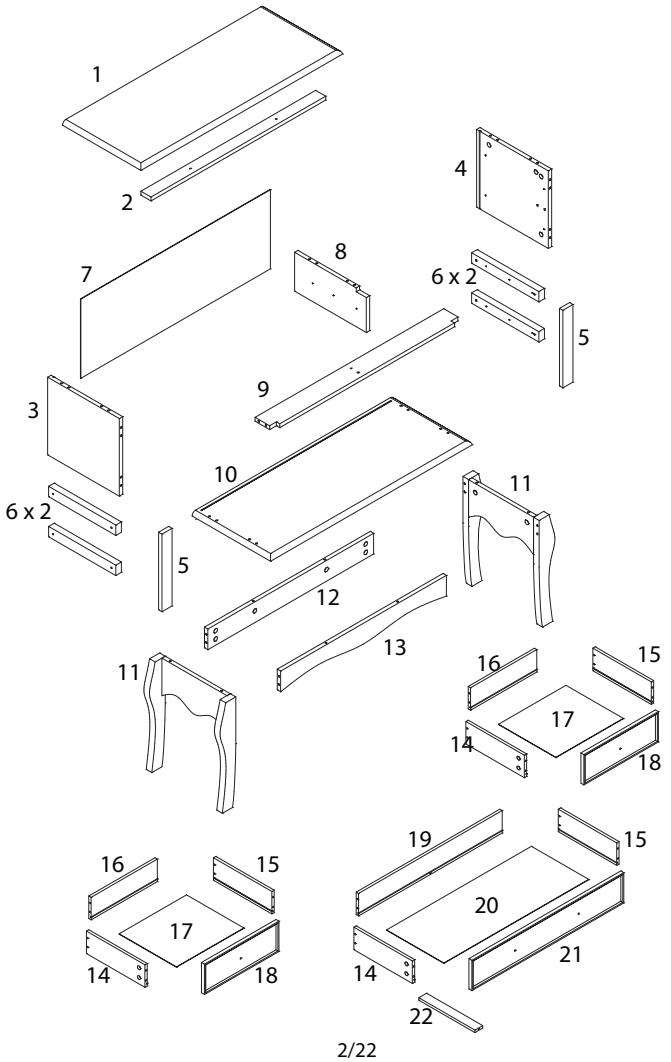

2/22

1 x 1	2 x 1	3 x 1	4 x 1	5 x 2
6 x 4	7 x 1	8 x 1	9 x 1	10 x 1
11 x 2	12 x 1	13 x 1	14 x 3	15 x 3
16 x 2	17 x 2	18 x 2	19 x 1	20 x 1
21 x 1	22 x 1			

3/22

A	B	C
x 41	x 41	x 17
D M3 x 12 x 36	E M4 x 35 x 27	F x 4
G M4 x 16 x 4	H x 1	I M3 x 14 x 1
J x 1	K x 6	L x 6
M M4 x 25 x 2	N x 4	O M3 x 14 x 4

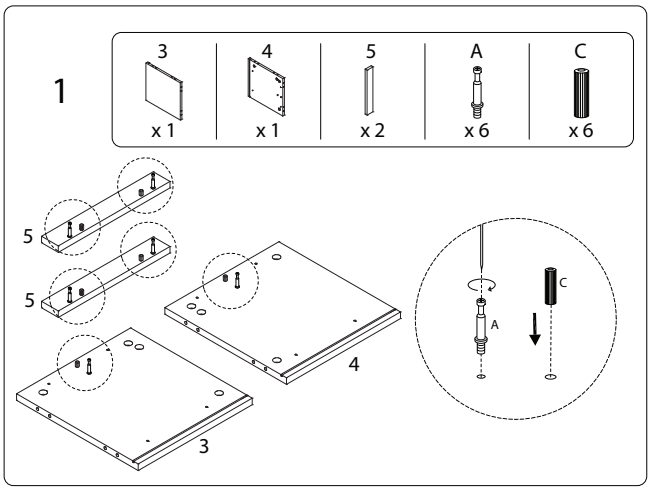

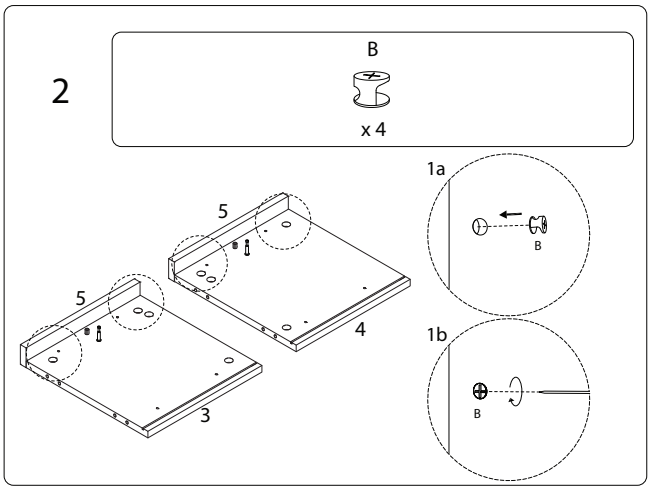

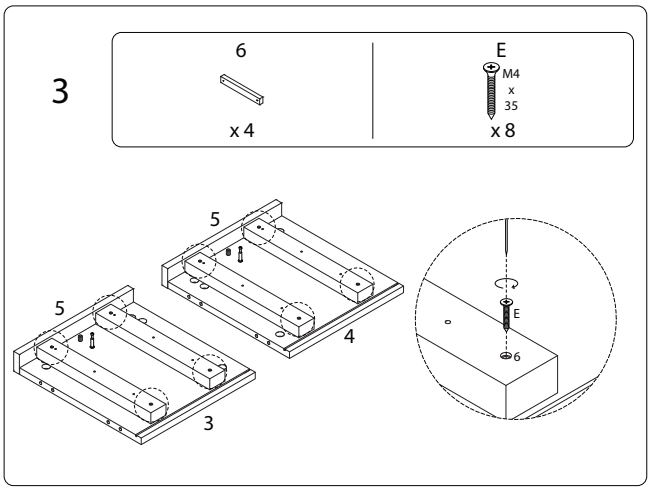

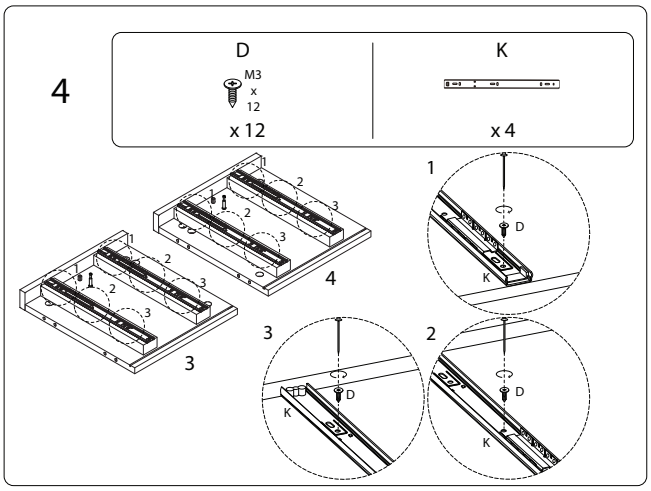

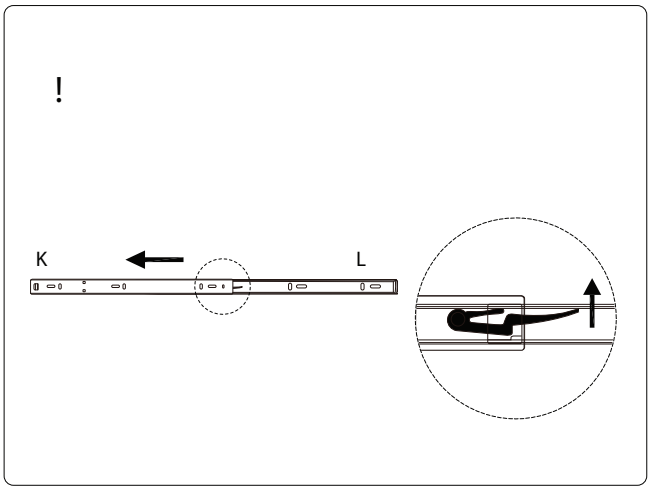

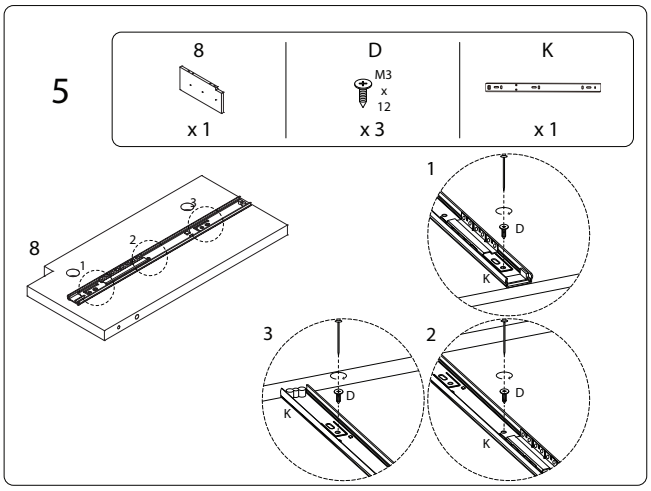

6

D
M3 x 12
x 3

K
x 1

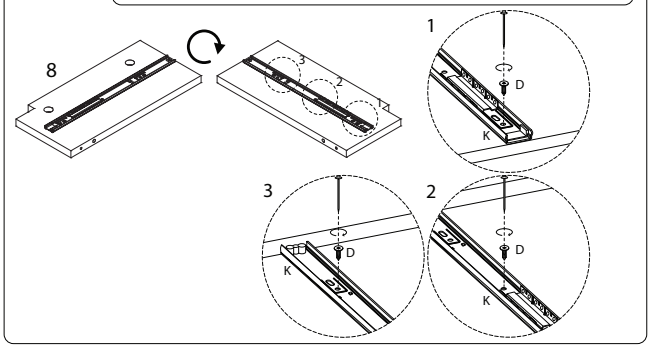

8

9
x 1

E
M4 x 35
x 1

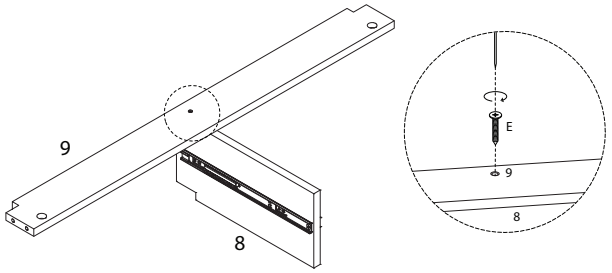

7

C
x 1

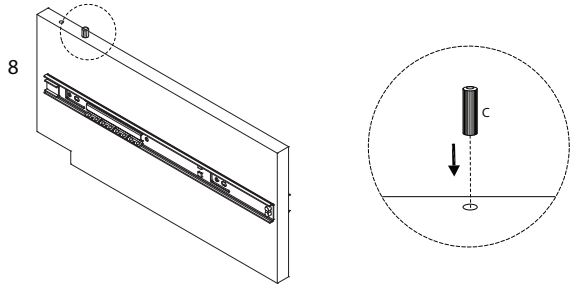

9

B
x 2

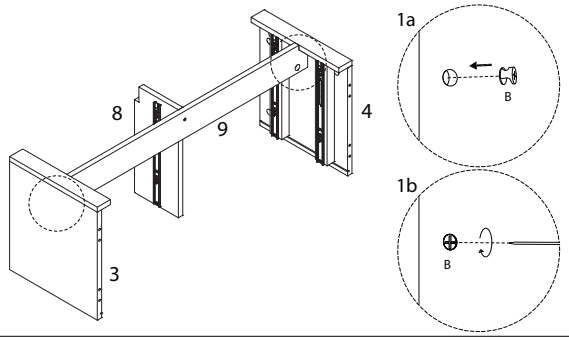

680/LAMAR/030123/

680/LAMAR/030123/

10

1
x 1

A
x 6

C
x 6

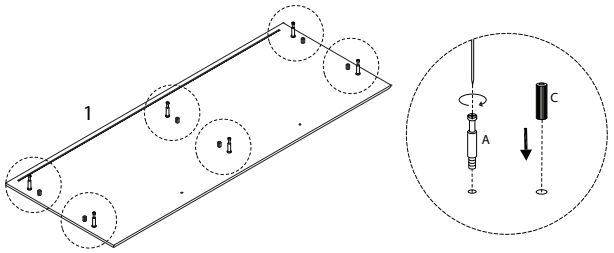

12

B
x 6

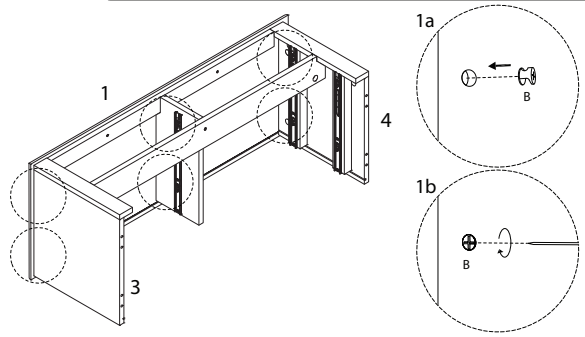

11

2
x 1

M
M4 x 25
x 2

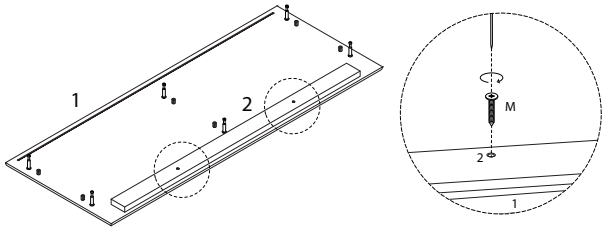

13

7
x 1

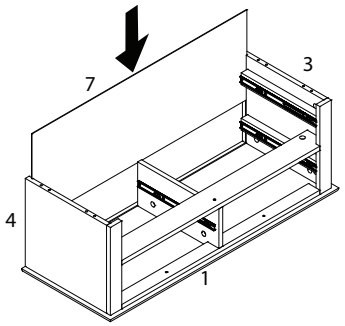

680/LAMAR/030123/

680/LAMAR/030123/

14

C
x 4

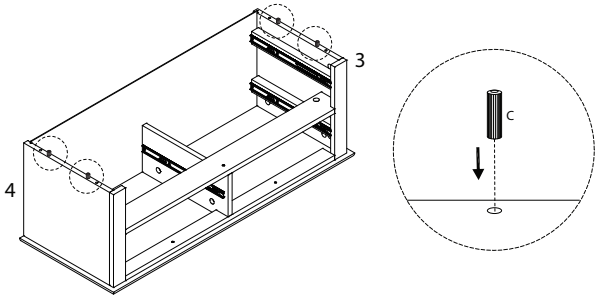

15

10
x 1

E
M4 x 35
x 4

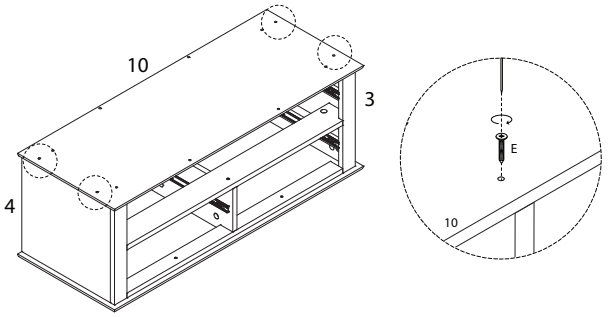

16

A
x 8

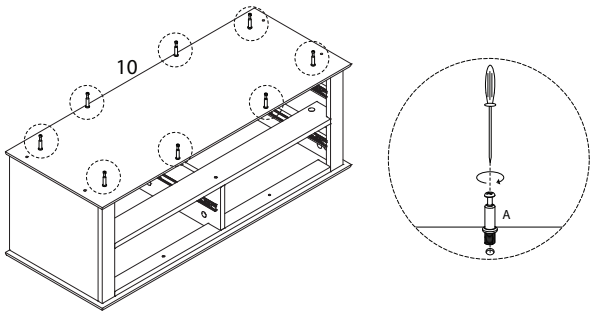

17

11
x 2

A
x 8

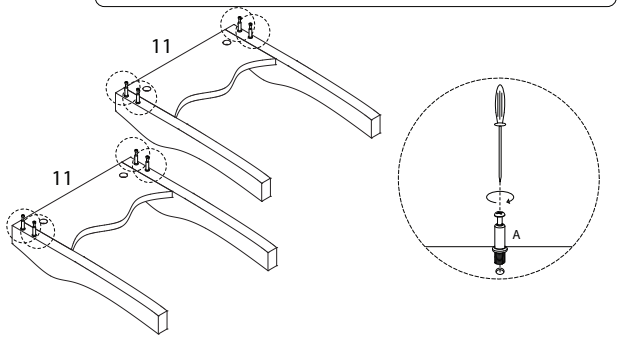

18

12
x 1

13
x 1

B
x 8

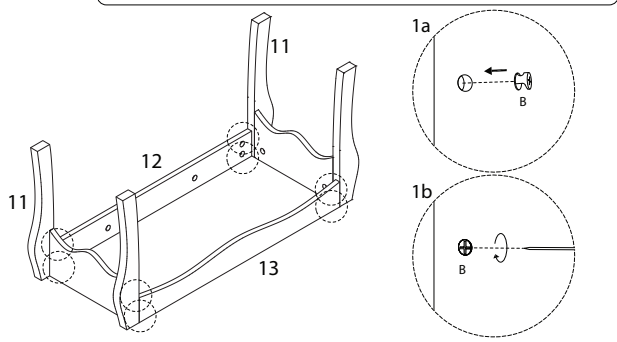

19

B
x 8

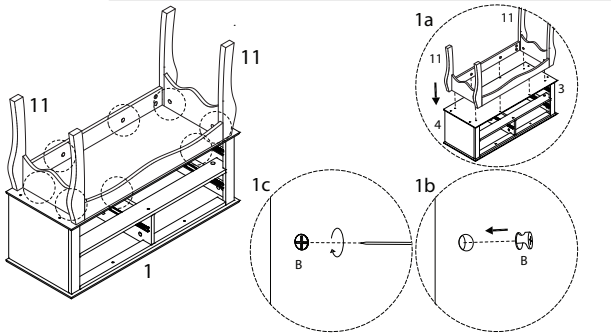

20 x 3

14
x 1

15
x 1

D
M3 x 12
x 6

L
x 2

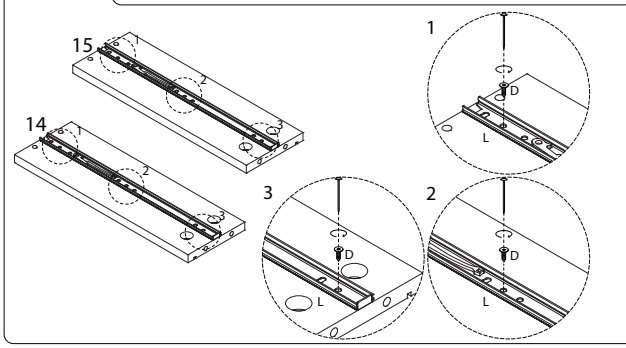

21 x 2

18
x 1

A
x 4

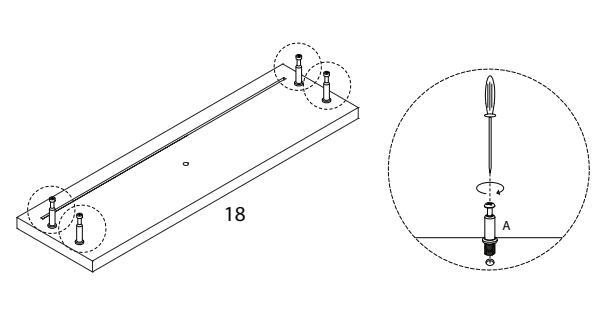

22 x 2

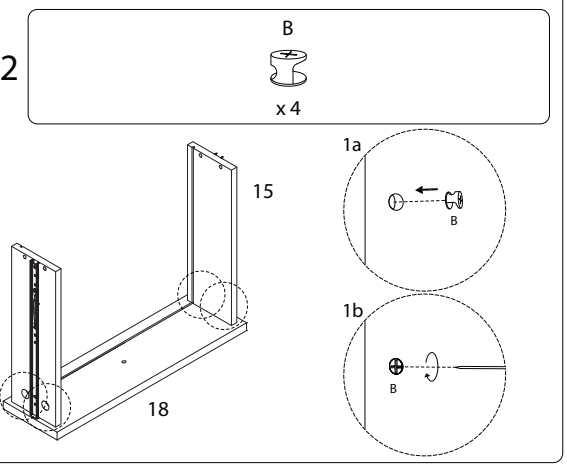

24 x 2

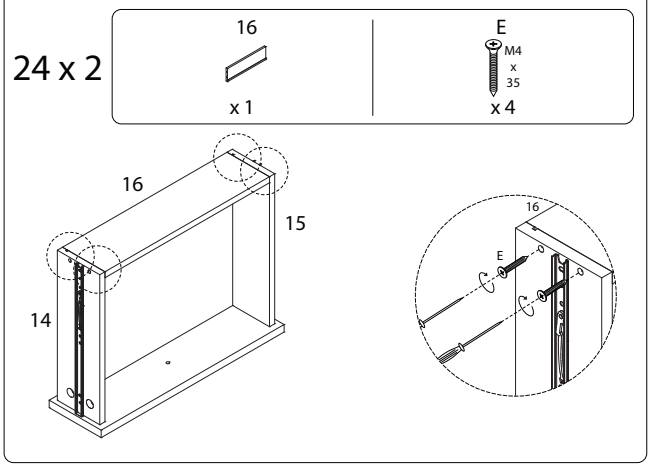

23 x 2

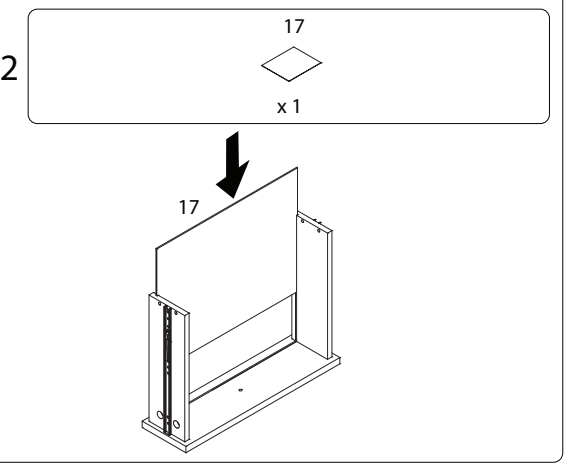

25 x 2

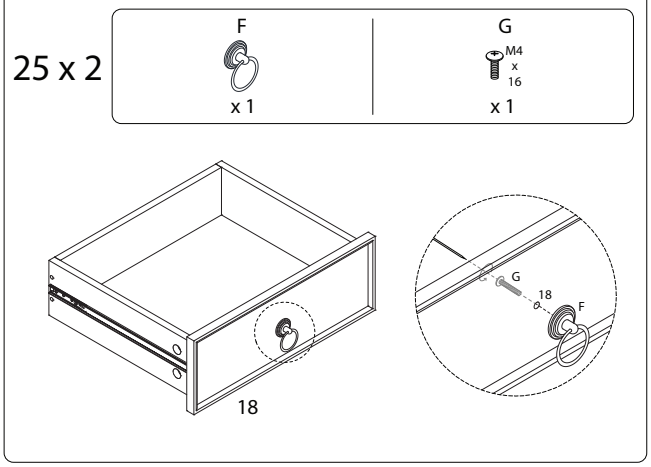

26

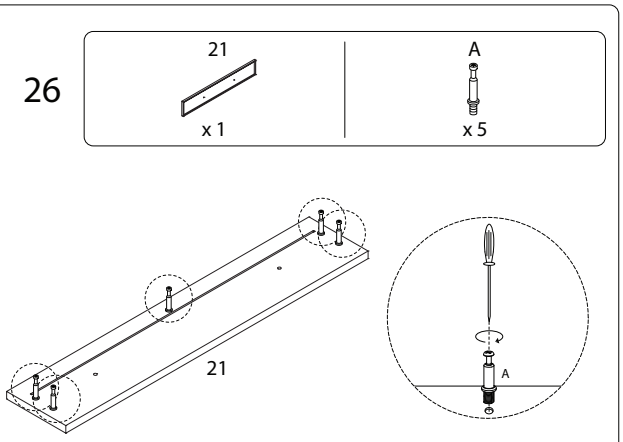

28

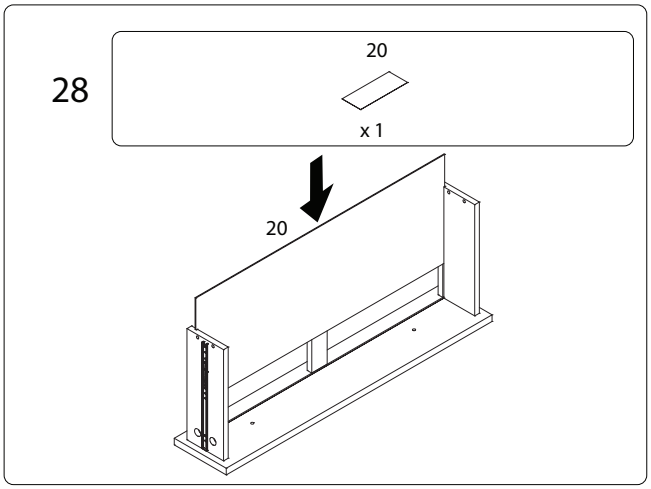

27

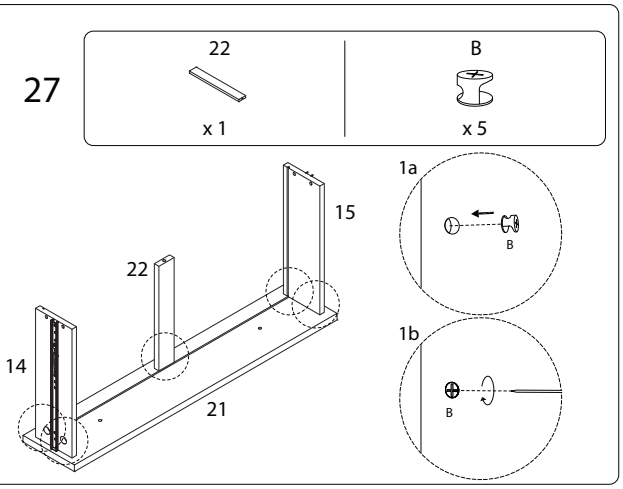

29

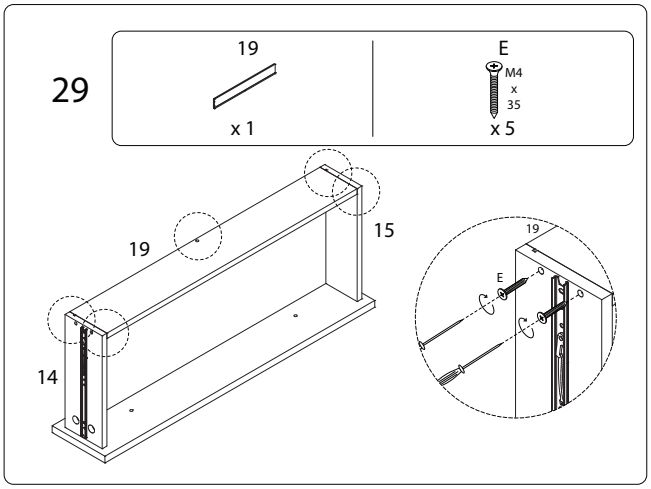

30

F	G
x 2	M4 x 16 x 2

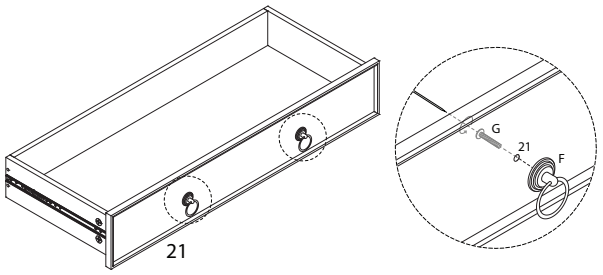

32

H	I
x 1	M3 x 14 x 1

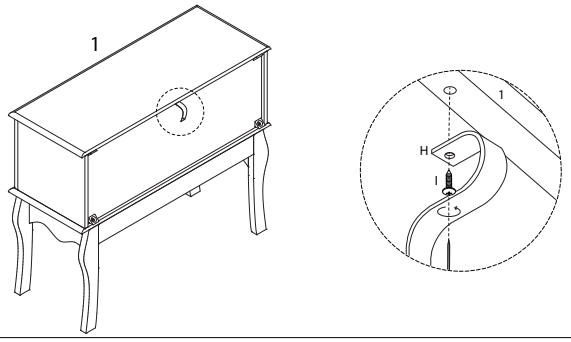

31

N	O
x 4	M3 x 14 x 4

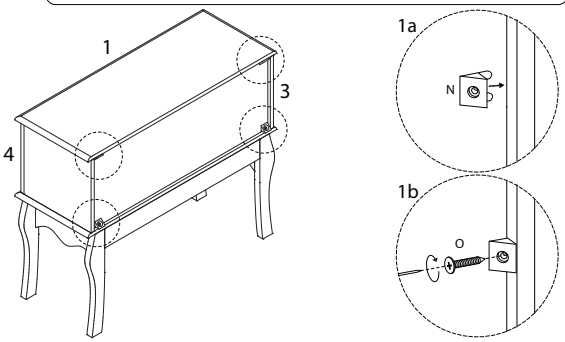

33

E	J
M4 x 35 x 1	x 1

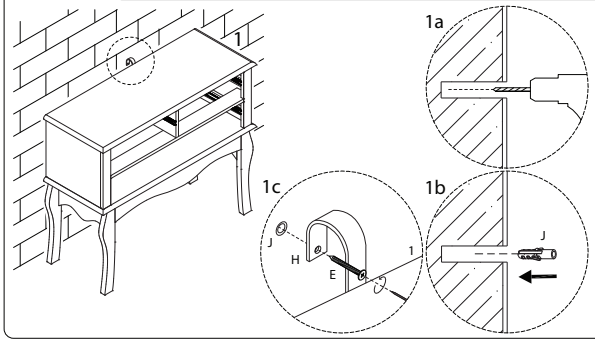

34

