ALNOR

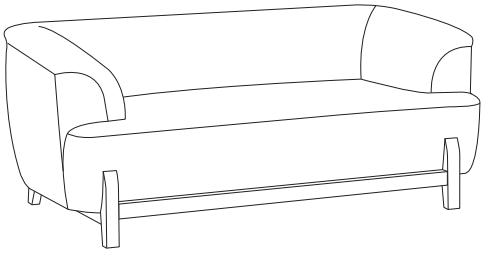

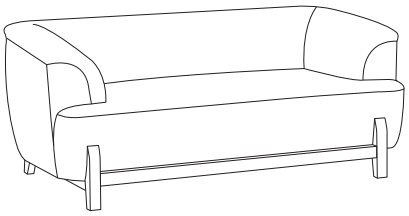

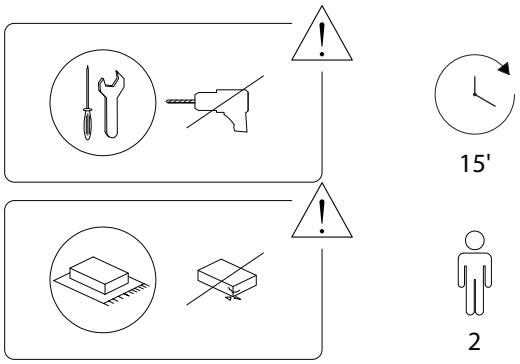

1/4

600/ALNOR/301025/

A	B	C	D
x 1	x 1	x 1	x 2

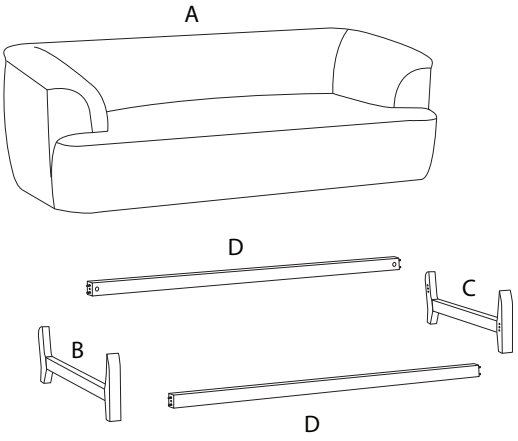

E	F	G	H	I
x 4	x 4	x 4	M8 x 70 x 8	x 1

2/4

600/ALNOR/301025/

1

B	C	E
x 1	x 1	x 4

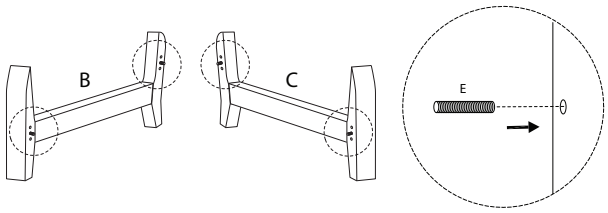

2

D	F	G	I
x 2	x 4	x 4	x 4

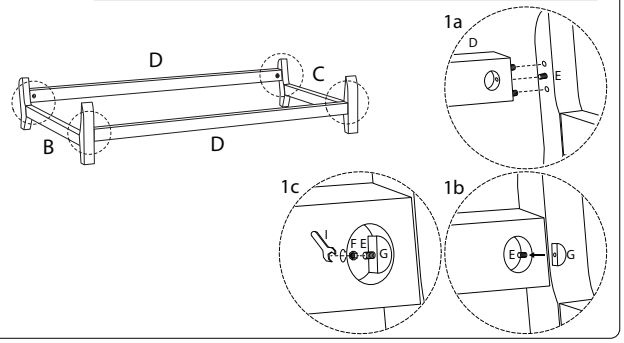

3/4

600/ALNOR/301025/

3

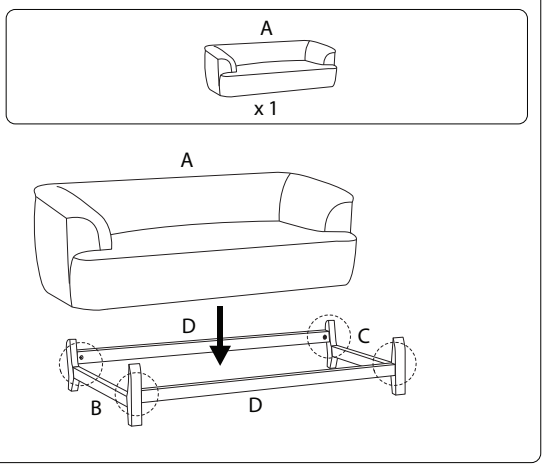

4

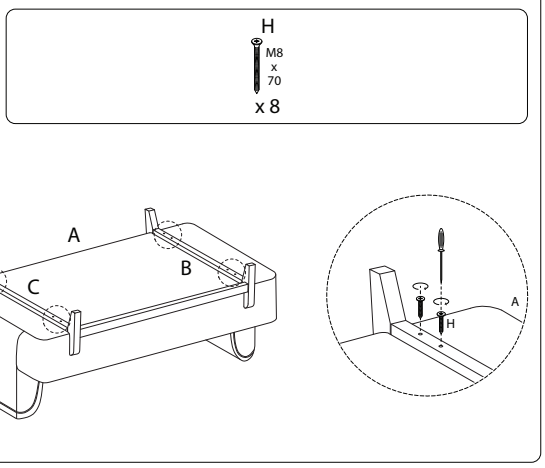

600/ALNOR/301025/