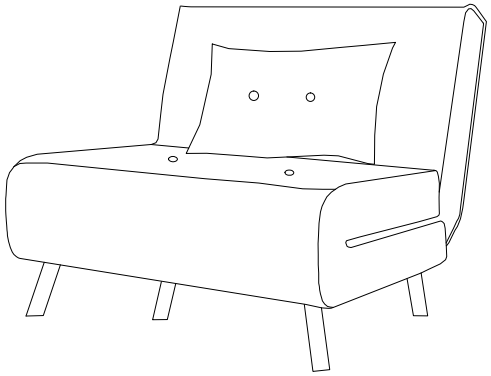

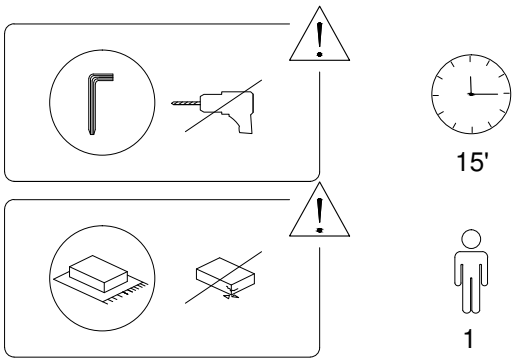
15'
1

1/5

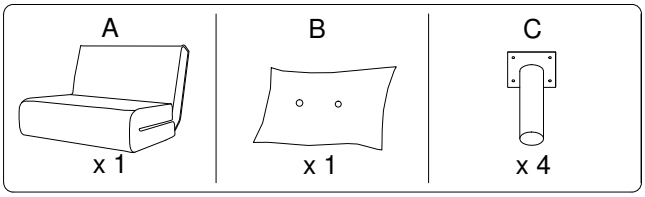
A
x 1
B
x 1
C
x 4

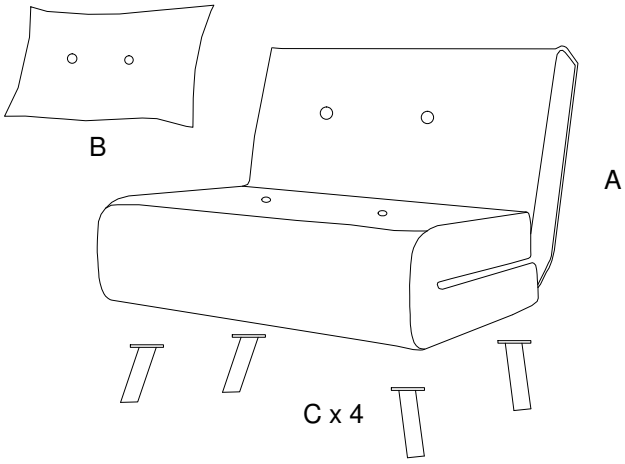
B
A
C x 4

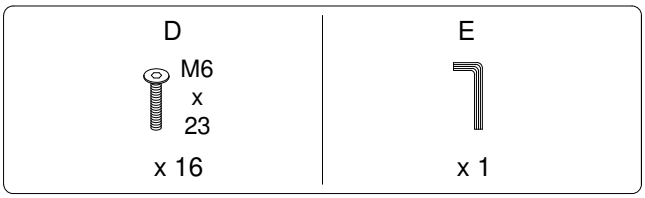
D
M6
x
23
x 16
E
x 1

2/5

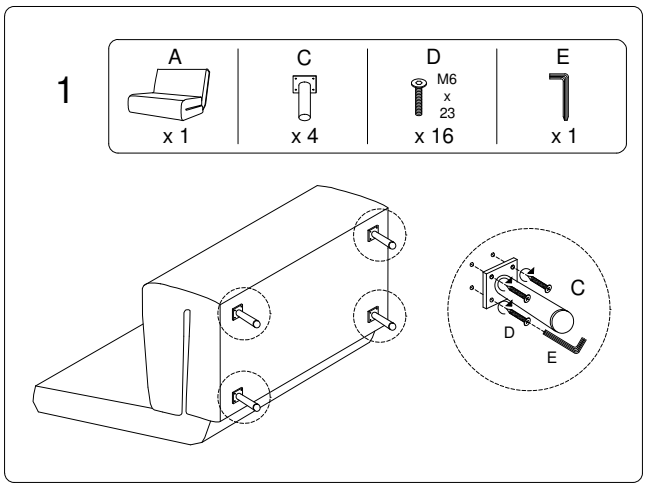
1
A
x 1
C
x 4
D
M6
x
23
x 16
E
x 1
C
D
E

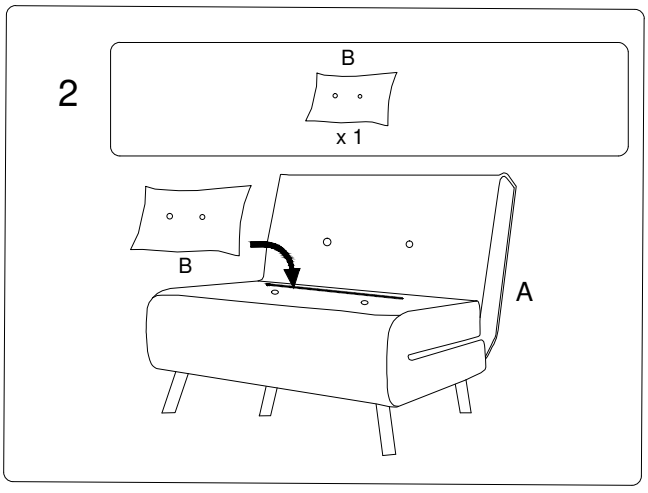
2
B
x 1
B
A

3/5

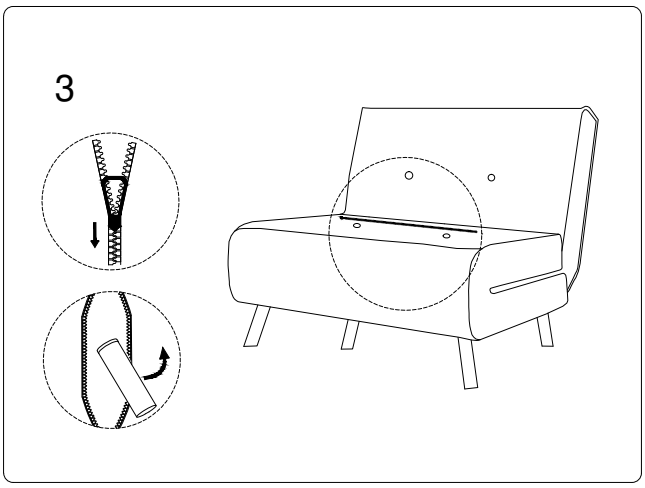
3

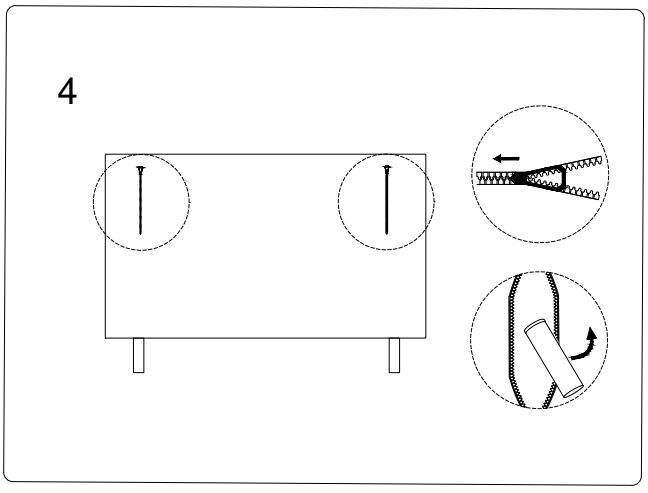
4

4/5

5

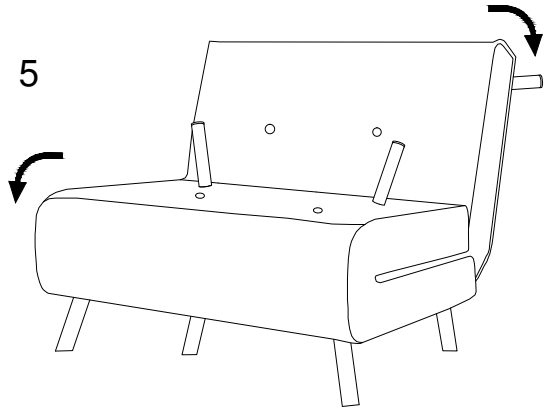

6

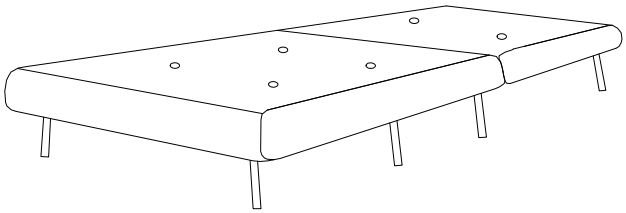

141/FARRIS/220518/