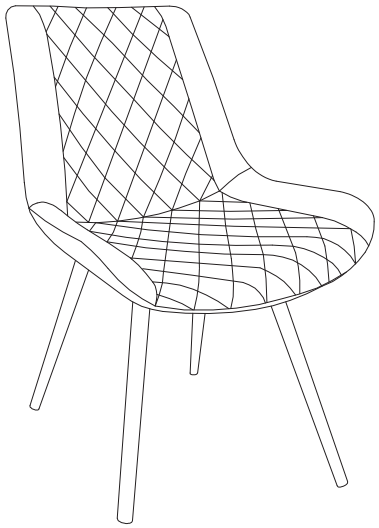

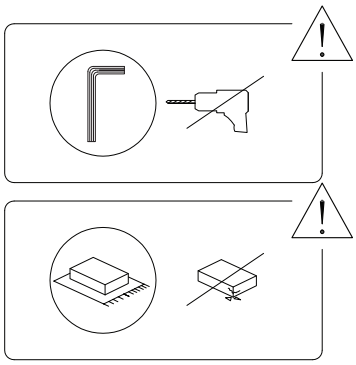



20'



1

1/4

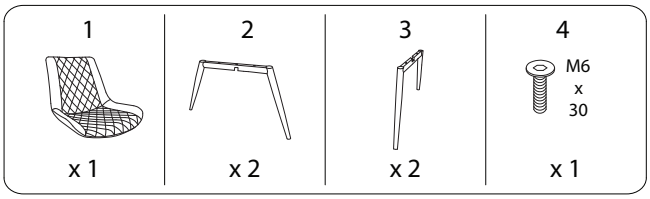

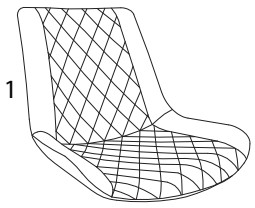

1

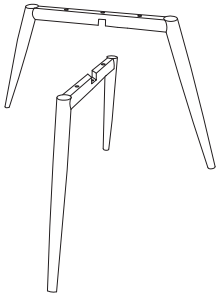

2

3

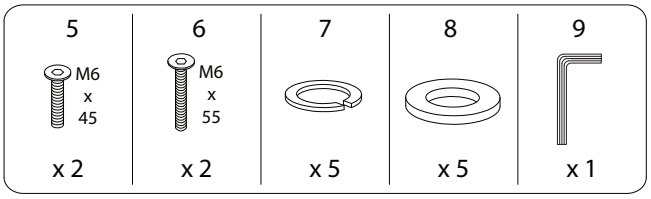

2/4

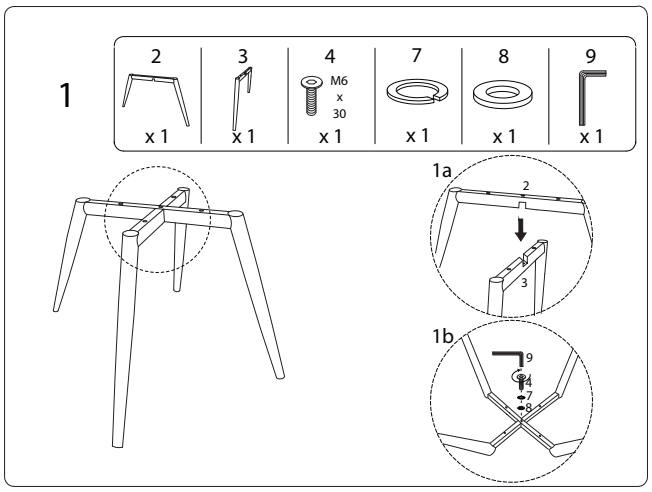

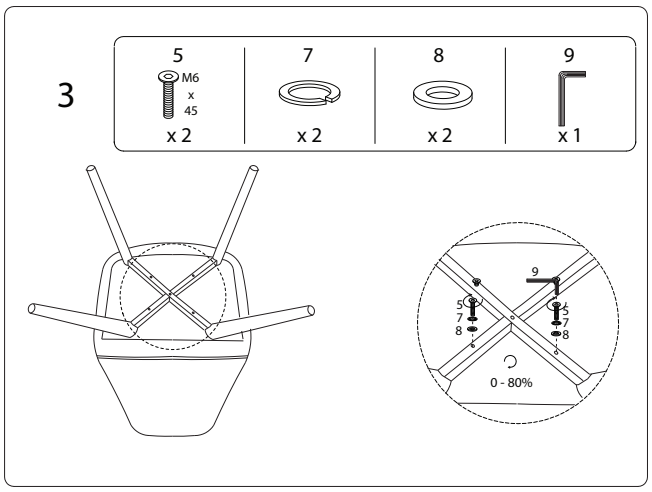

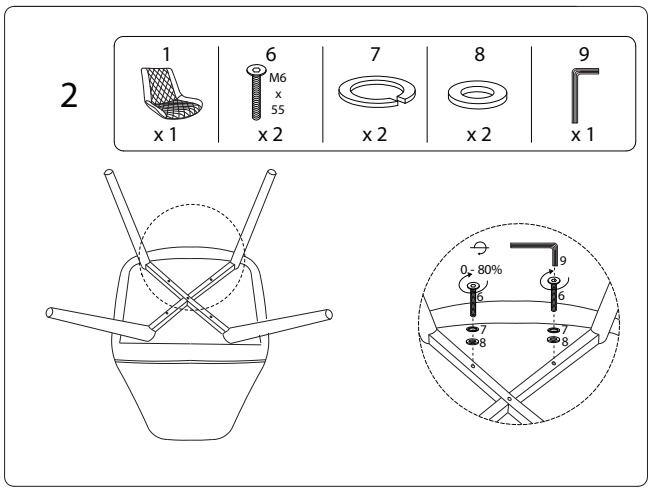

3/4

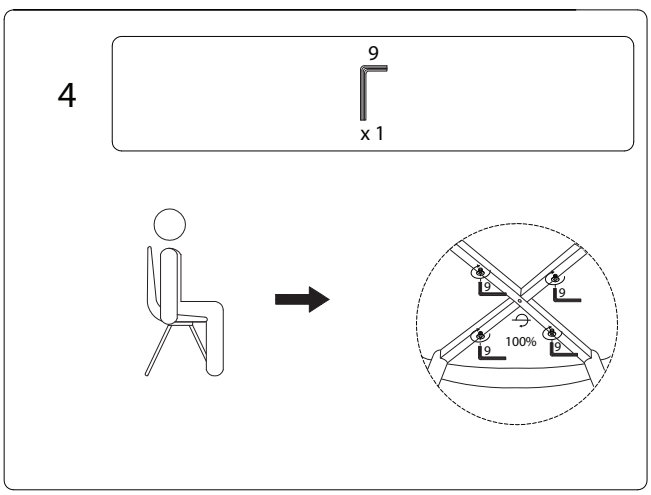

4/4