# VARNA

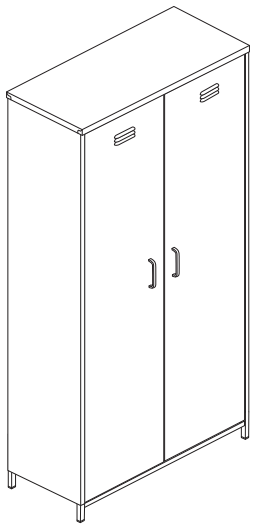

1/13

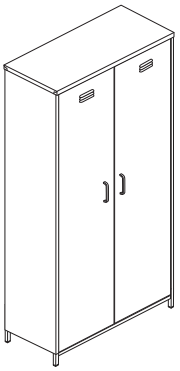

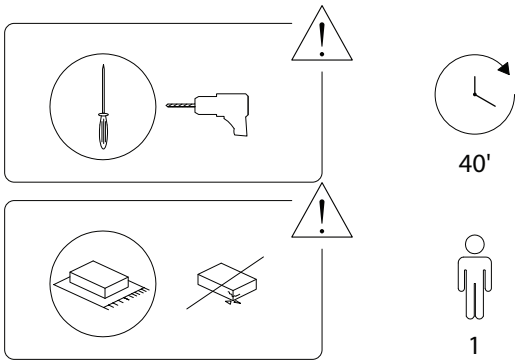


2/13



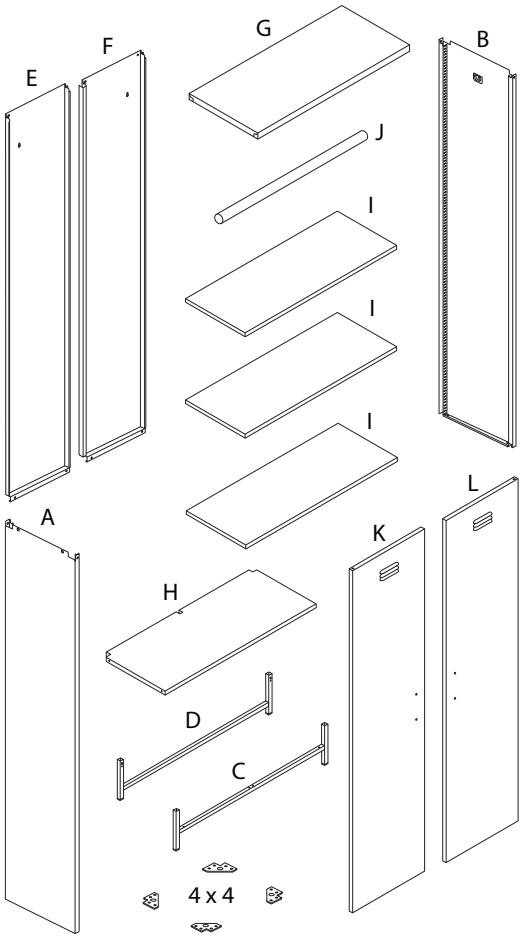


3/13



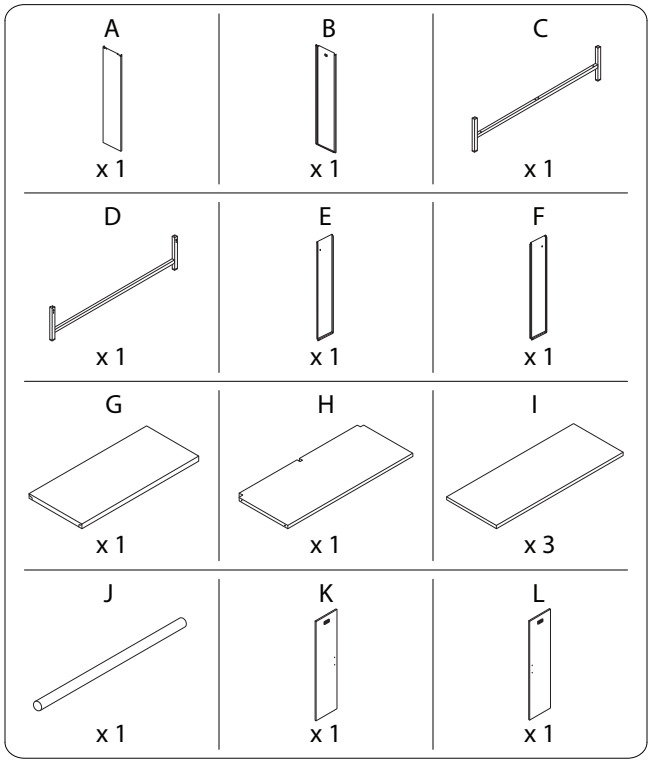


4/13

| 1 | 2A | 2B |
|---|---|---|
|   |  |   |
| x 20 | x 2 | x 2 |
| **3A** | **3B** | **3C** |
|  |   |   |
| x 2 | x 4 | x 4 |
| **4** | **5A** | **5B** |
|  |   |   |
| x 4 | x 2 | x 2 |
| **5C** | **6** | **7A** |
|  |  | 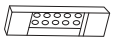 |
| x 2 | x 12 | x 4 |
| **7B** | | |
|  | | |
| x 4 | | |





## 1

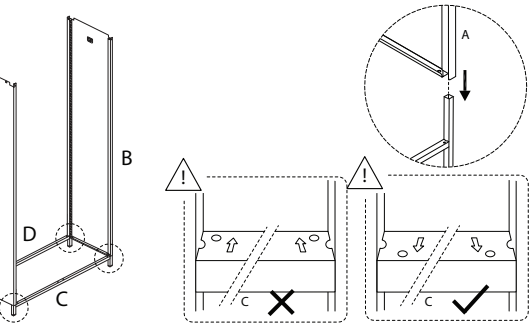


## 2

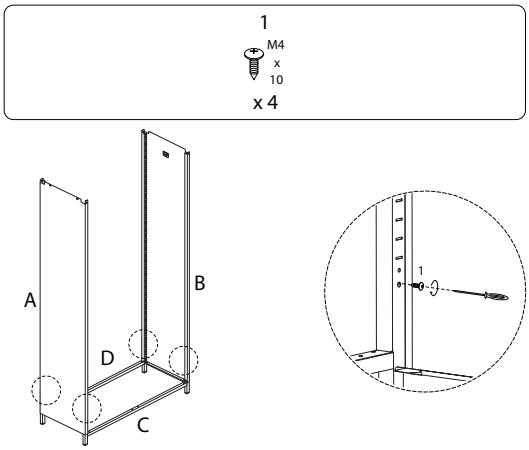






## 3

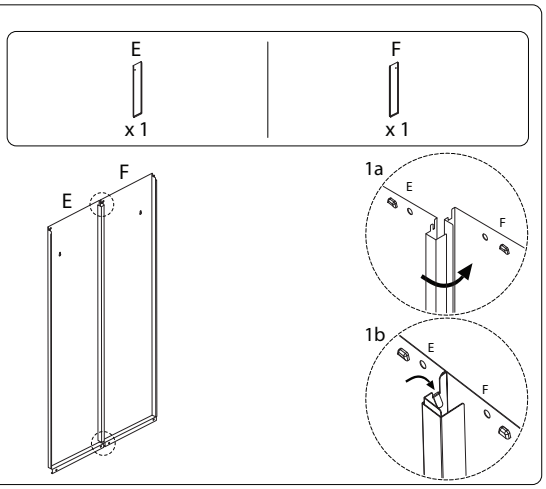


## 5

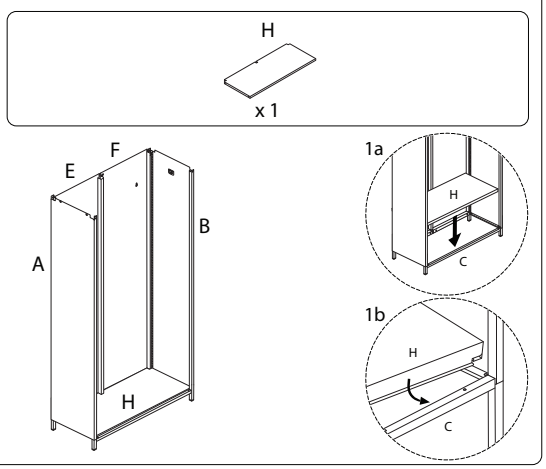


## 4

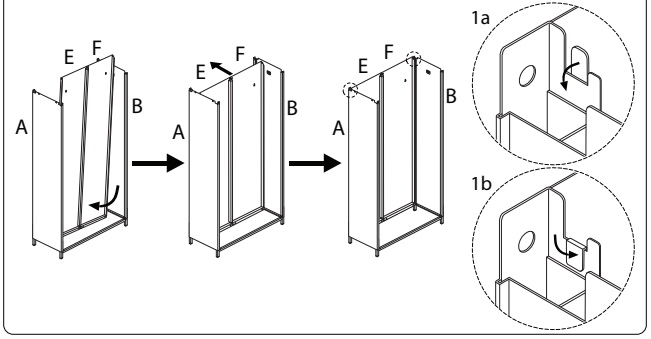


## 6

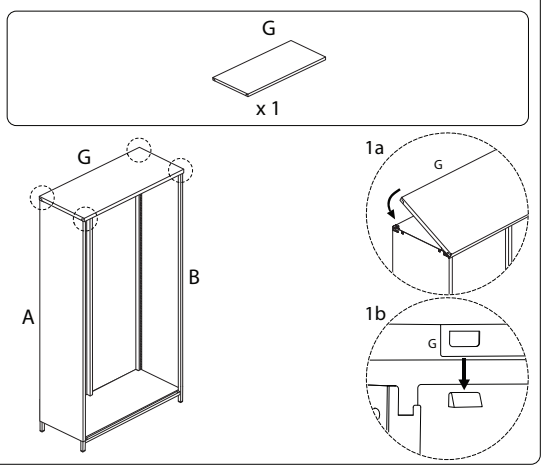

## 7

1 — M4 x 10 — x 16

4 — x 4

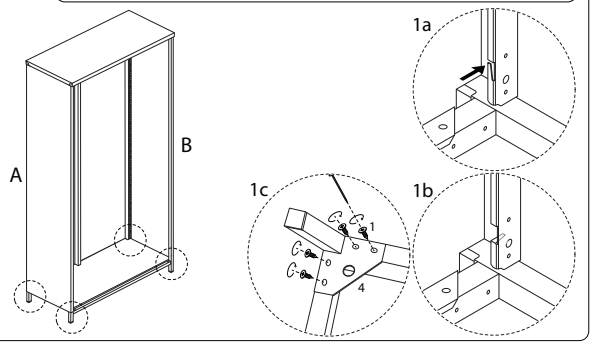


## 8

5C — x 2

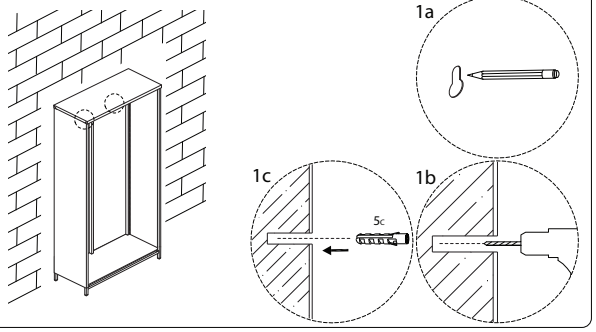






## 9

5A — M4 x 35 — x 2

5B — x 2

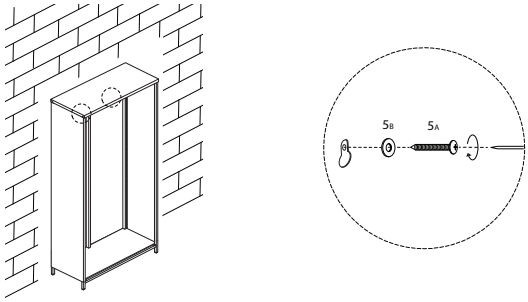


## 10

J — x 1

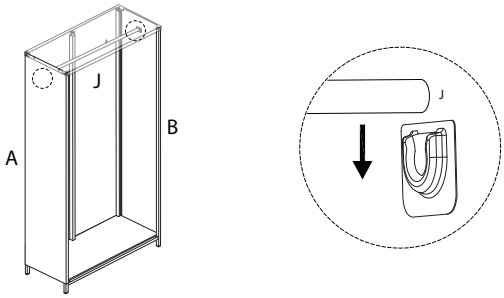






## 11

6 — x 12

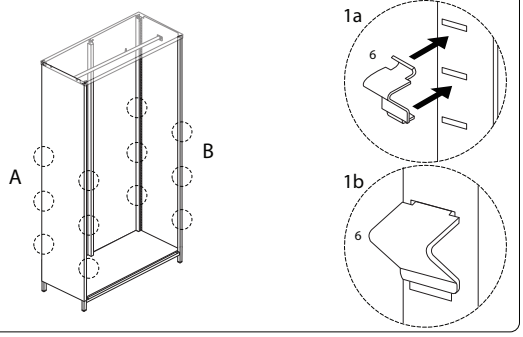


## 12

I — x 3

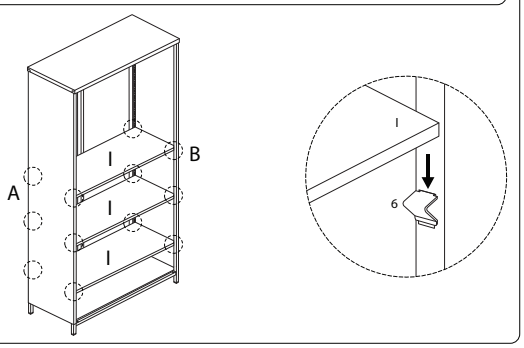






## 13

K — x 1

3A — x 1

3B — M4 — x 2

3C — M4 x 6 — x 2

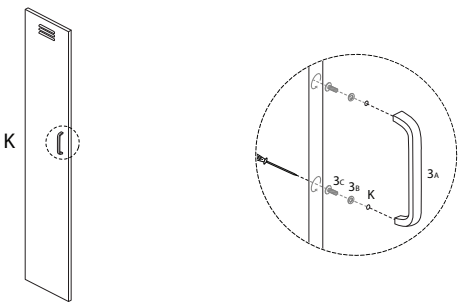


## 14

L — x 1

3A — x 1

3B — M4 — x 2

3C — M4 x 6 — x 2

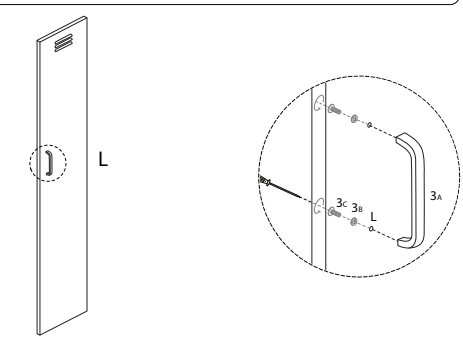

15

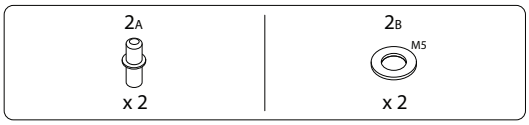


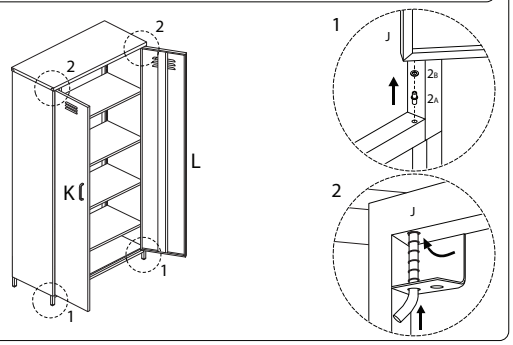


16

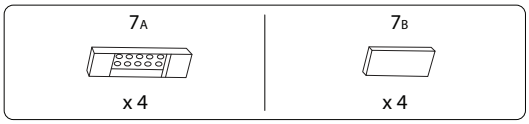


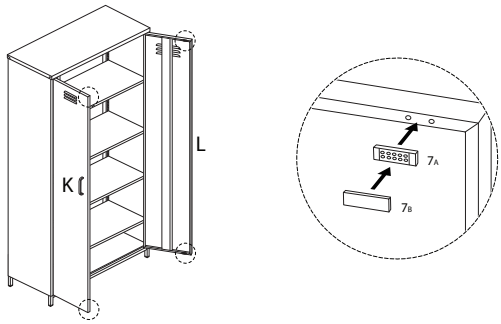




2121/VARNA/070426/