MEUDON

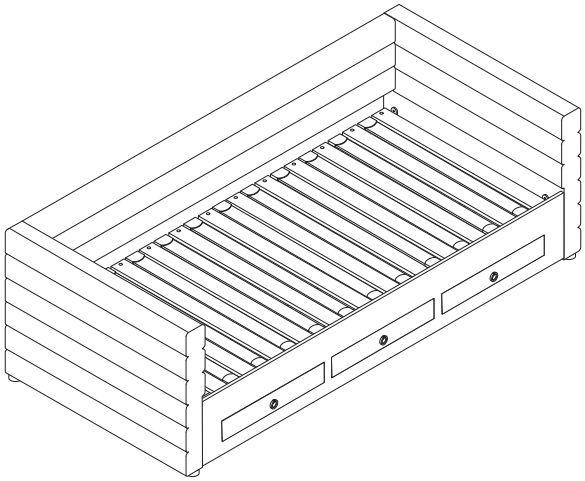

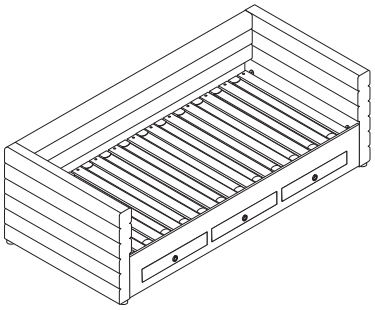

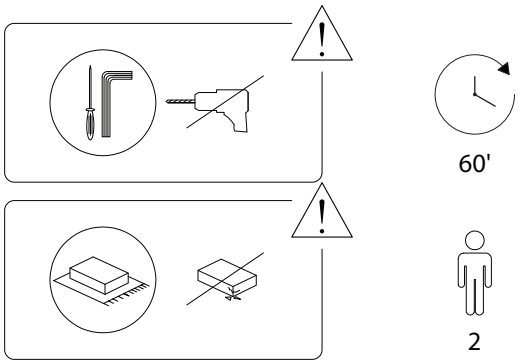
60'
2

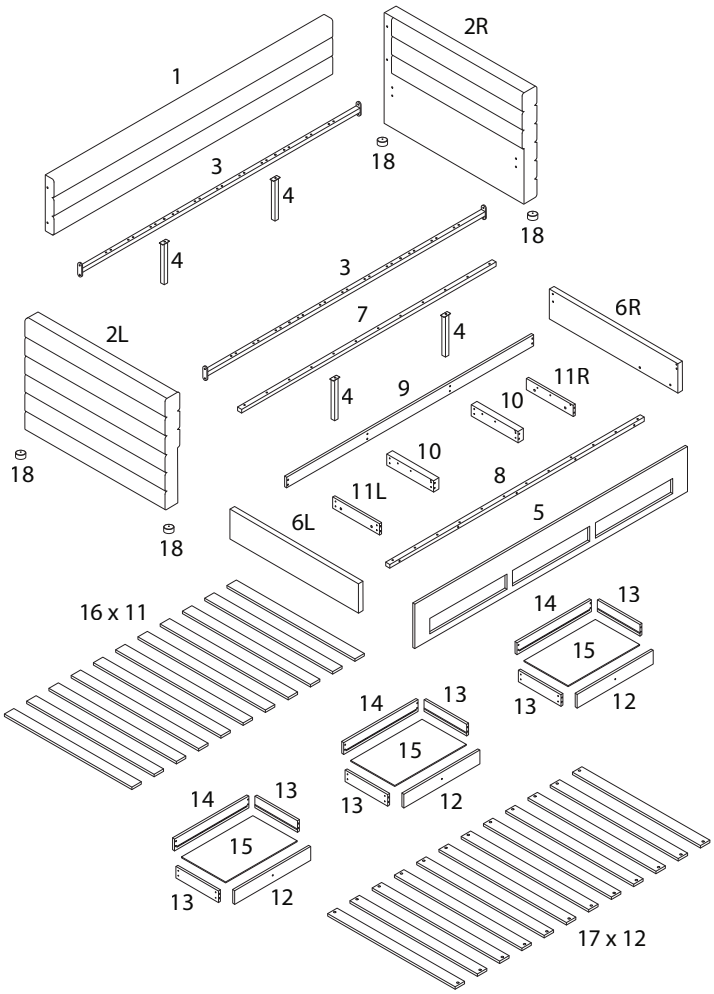
1
2R
3
18
4
4
18
3
7
4
6R
2L
4
9
11R
10
18
10
8
11L
6L
5
18
16 x 11
14
13
15
13
12
14
13
15
13
12
14
13
15
13
12
17 x 12

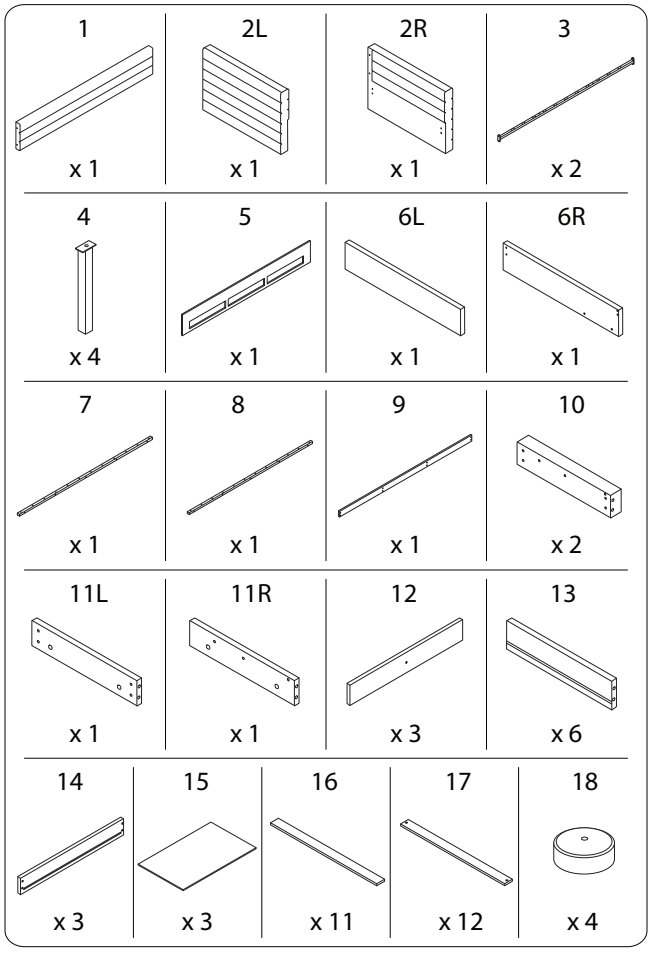
1
x 1
2L
x 1
2R
x 1
3
x 2
4
x 4
5
x 1
6L
x 1
6R
x 1
7
x 1
8
x 1
9
x 1
10
x 2
11L
x 1
11R
x 1
12
x 3
13
x 6
14
x 3
15
x 3
16
x 11
17
x 12
18
x 4

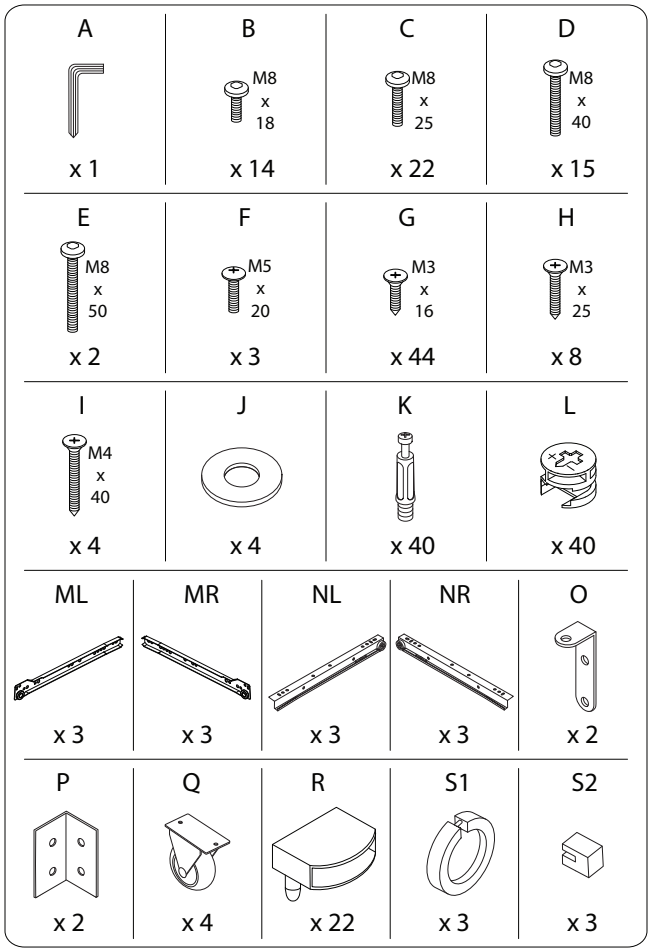
A
x 1
B
M8 x 18
x 14
C
M8 x 25
x 22
D
M8 x 40
x 15
E
M8 x 50
x 2
F
M5 x 20
x 3
G
M3 x 16
x 44
H
M3 x 25
x 8
I
M4 x 40
x 4
J
x 4
K
x 40
L
x 40
ML
x 3
MR
x 3
NL
x 3
NR
x 3
O
x 2
P
x 2
Q
x 4
R
x 22
S1
x 3
S2
x 3

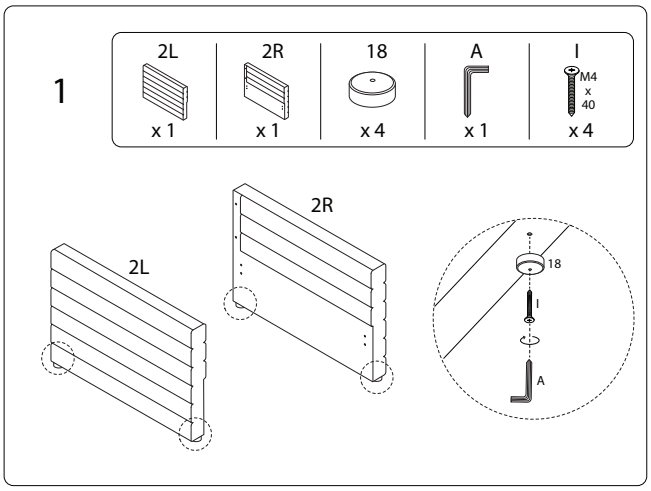
1
2L
x 1
2R
x 1
18
x 4
A
x 1
I
M4 x 40
x 4
2L
2R
18
I
A

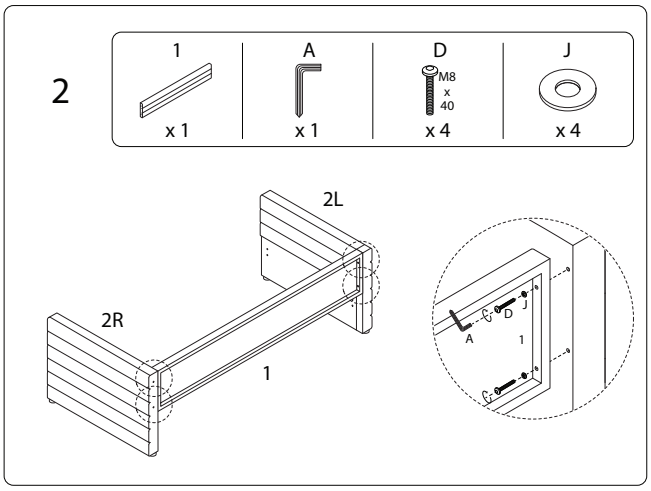
2
1
x 1
A
x 1
D
M8 x 40
x 4
J
x 4
2L
2R
1
A
D
J
1

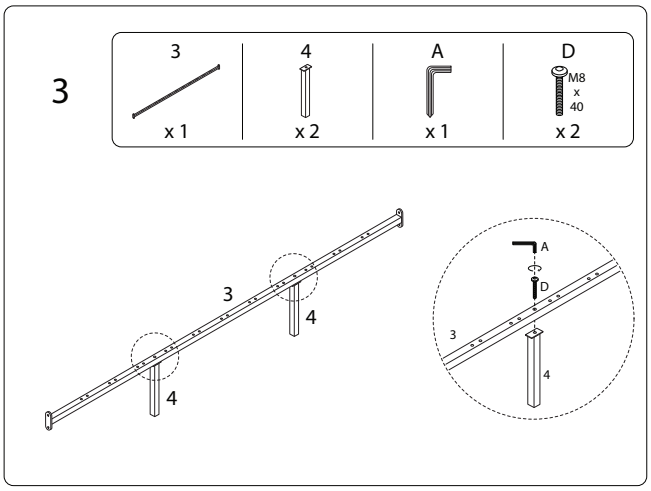
3
x 1
4
x 2
A
x 1
D
M8 x 40
x 2
3
4
4
A
D
3
4

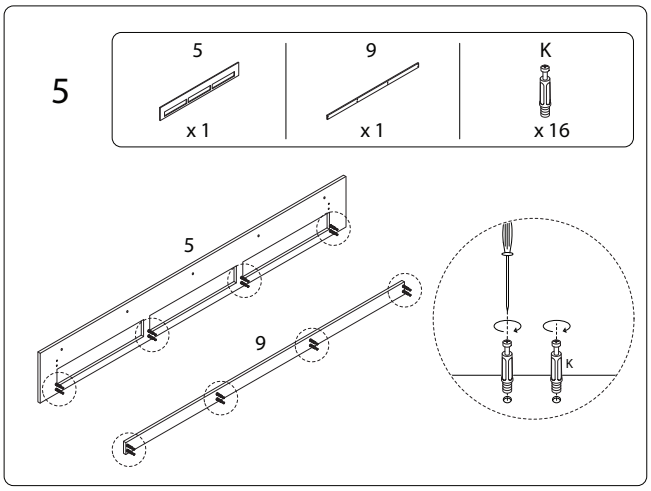
5
x 1
9
x 1
K
x 16
5
9
K

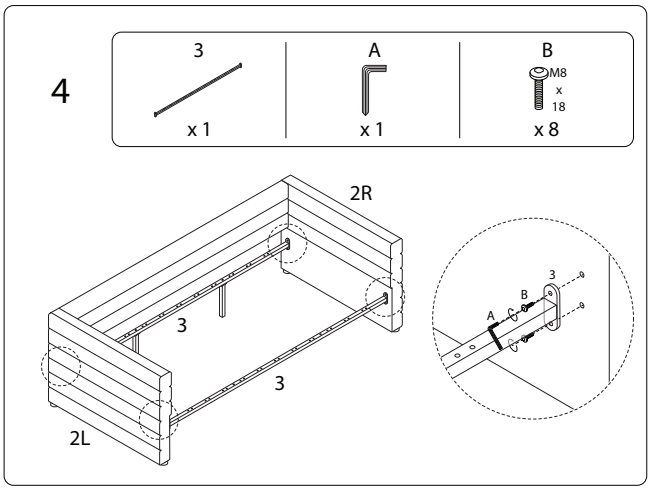
4
3
x 1
A
x 1
B
M8 x 18
x 8
2R
3
3
2L
3
B
A
3

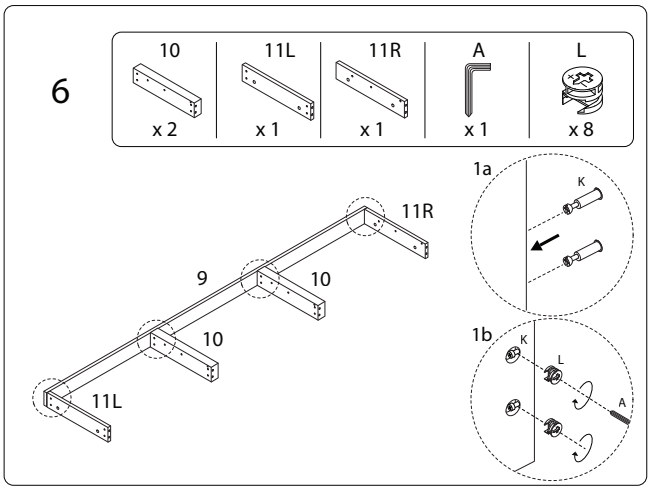
6
10
x 2
11L
x 1
11R
x 1
A
x 1
L
x 8
1a
K
11R
9
10
10
11L
1b
K
L
A

7

A	L
x 1	x 8

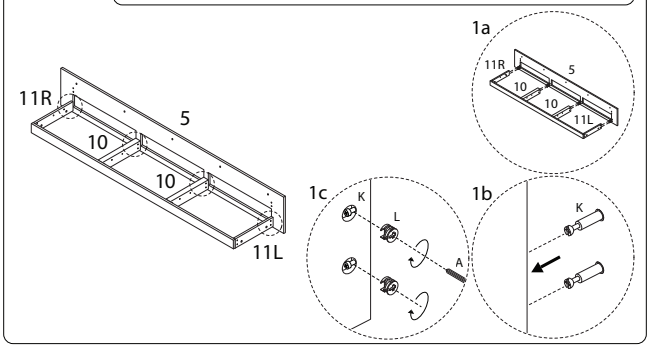

8

A	G	ML	MR
x 1	M3 x 16 x 18	x 3	x 3

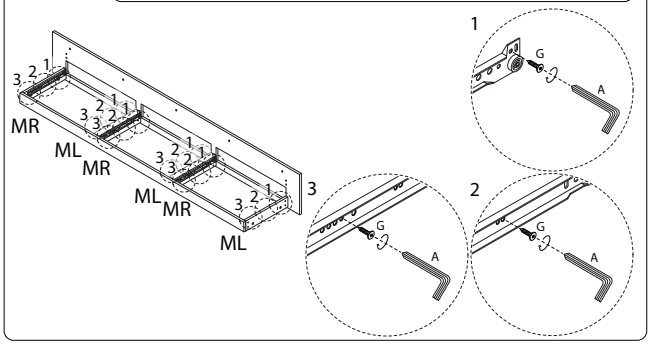

9

6L	6R	A	H	Q
x 1	x 1	x 1	M3 x 25 x 8	x 4

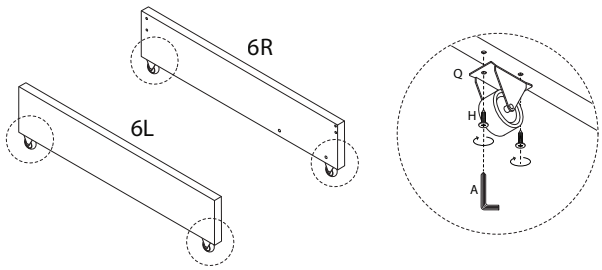

10

A	D
x 1	M8 x 40 x 4

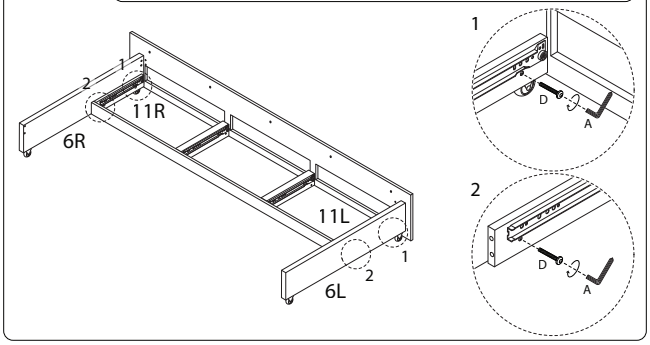

11

A	G	P
x 1	M3 x 16 x 8	x 2

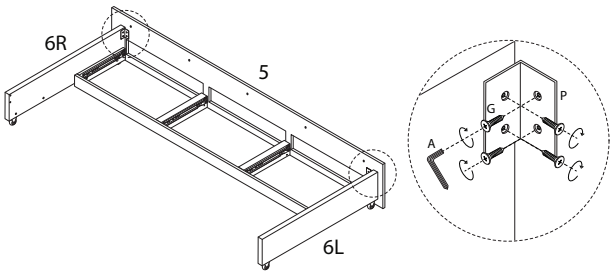

12

8	A	D
x 1	x 1	M8 x 40 x 5

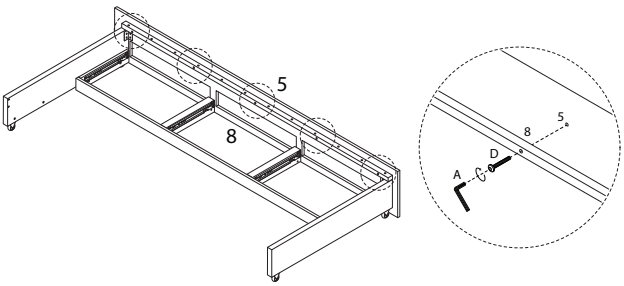

13

7	A	B	O
x 1	x 1	M8 x 18 x 2	x 2

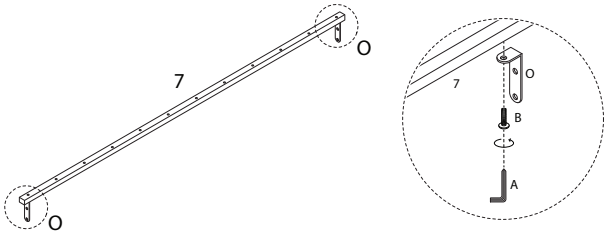

14

A	B
x 1	M8 x 18 x 4

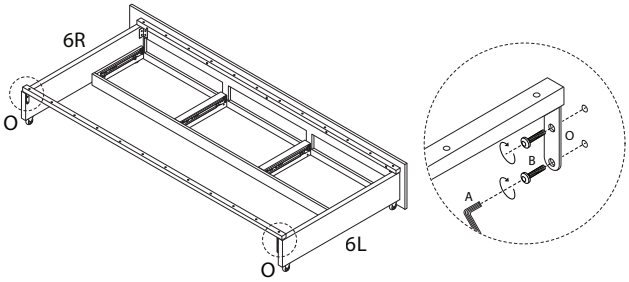

15 x 3

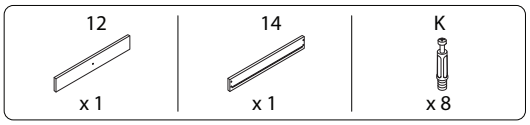

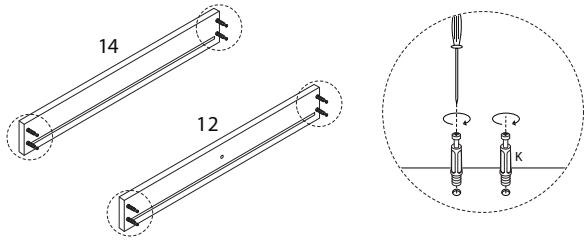

16 x 3

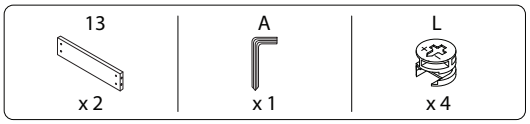

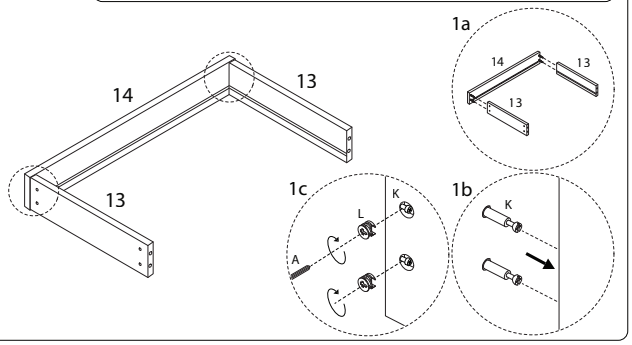

17 x 3

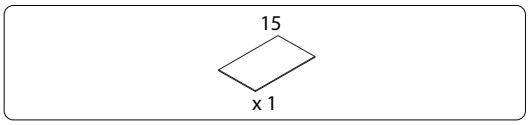

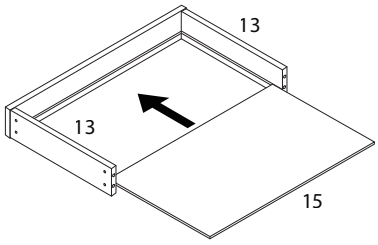

18 x 3

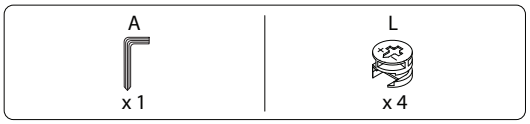

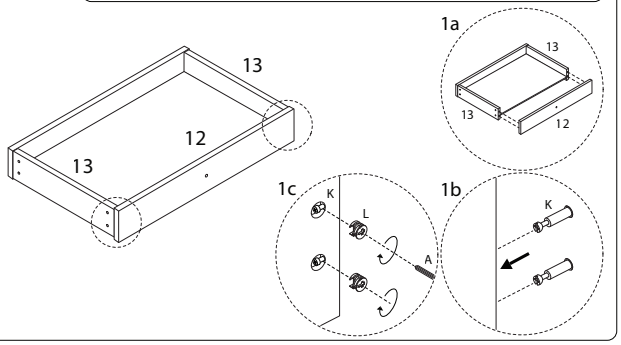

19 x 3

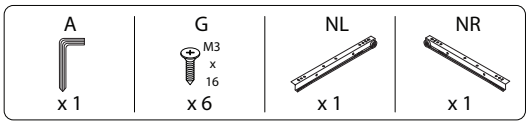

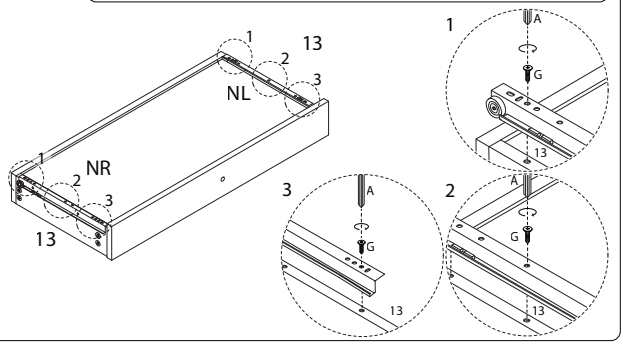

21

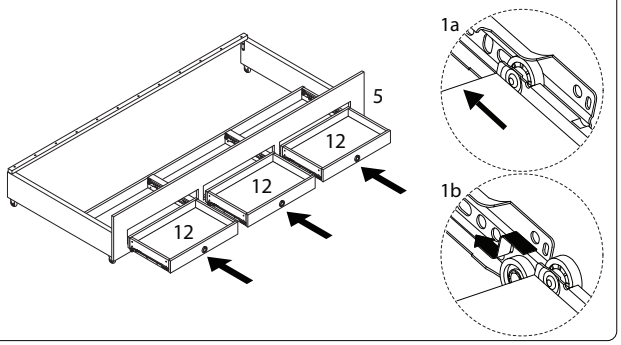

20 x 3

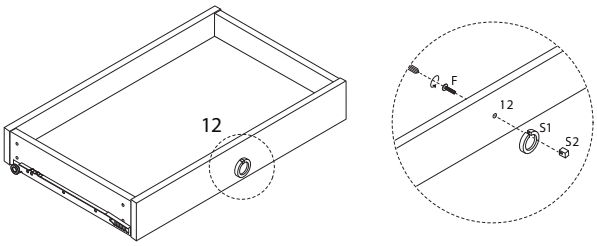

22

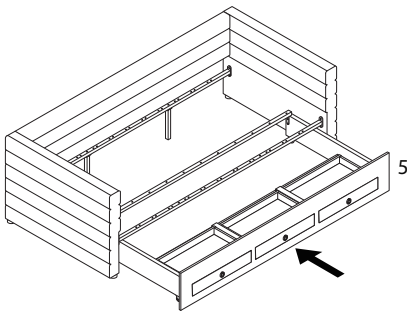

23

16	R
x 11	x 22

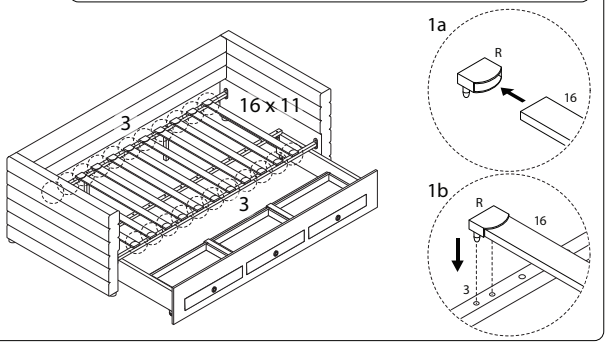

24

4	17	A	C	E
			M8 x 25	M8 x 50
x 2	x 2	x 1	x 2	x 2

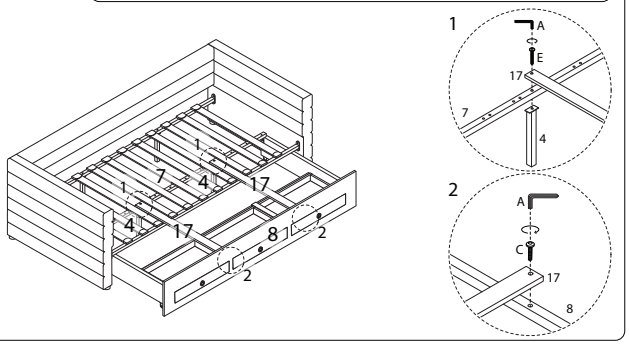

25

17	A	C
		M8 x 25
x 10	x 1	x 20

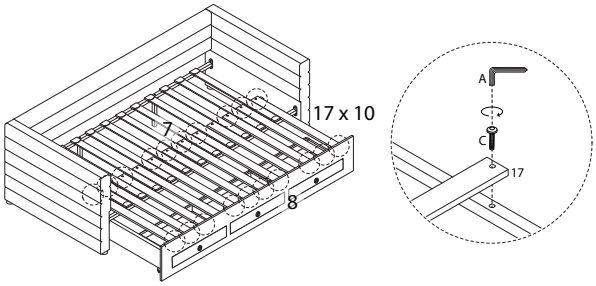
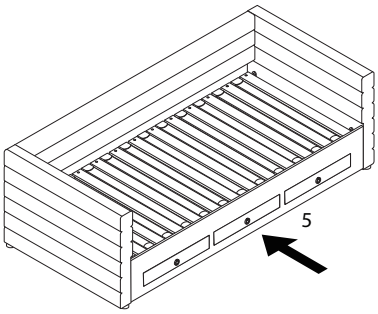
!