BLYTHE

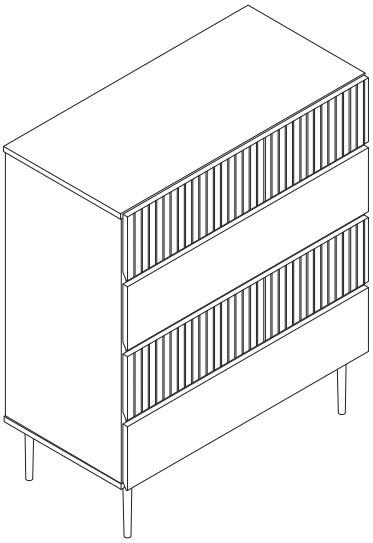

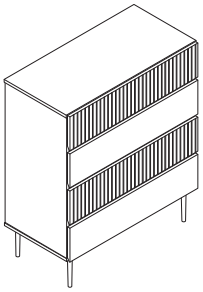

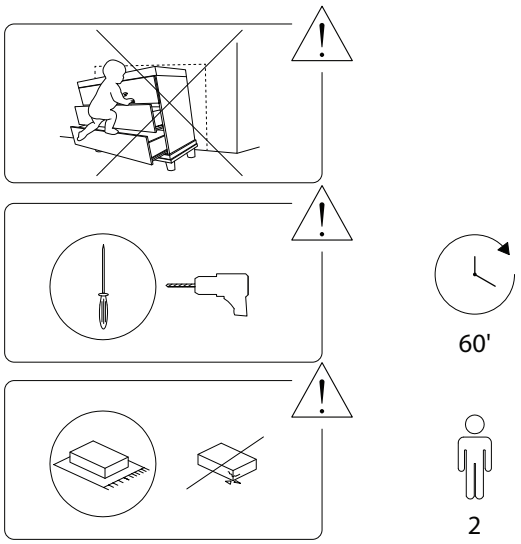

1444/BLYTHE/060525/

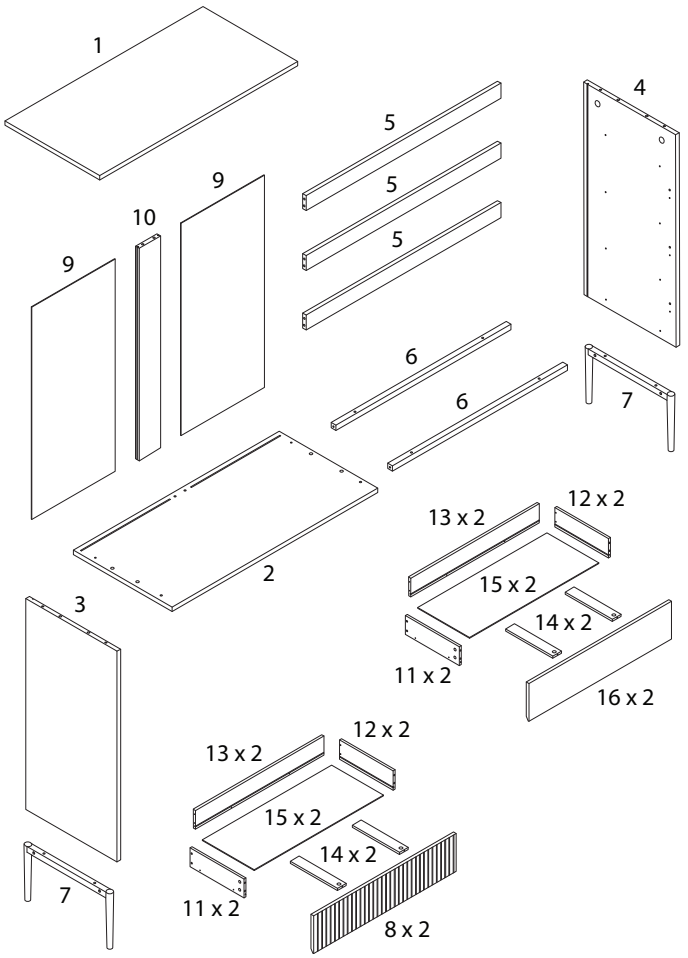

1444/BLYTHE/060525/

1	2	3	4
x 1	x 1	x 1	x 1
5	6	7	8
x 3	x 2	x 2	x 2
9	10	11	12
x 2	x 1	x 4	x 4
13	14	15	16
x 4	x 8	x 4	x 2

1444/BLYTHE/060525/

A	B	C
x 36	x 36	x 14
D	E	F
M4 x 40	M3 x 12	M4 x 30
x 6	x 32	x 24
CL	CR	DL
x 4	x 4	x 4
DR	H	I
x 4	M6 x 30	x 1
	J	
	M4 x 12	
	x 1	

1444/BLYTHE/060525/

1

3	4	CL	CR	E
x 1	x 1	x 4	x 4	M3 x 12 x 16

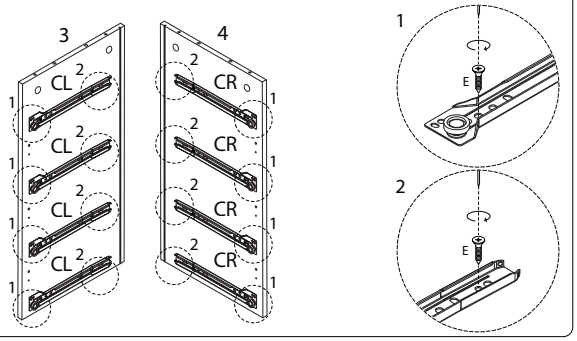

2

A
x 6

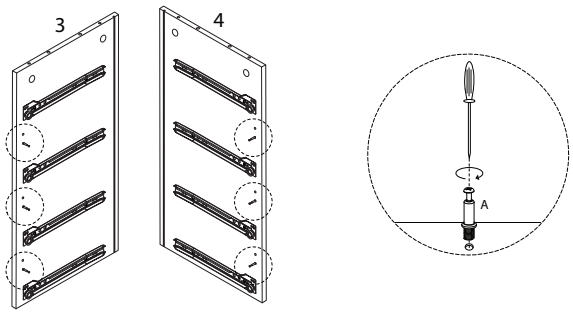

1444/BLYTHE/060525/

3 x 3

5	C
x 1	x 2

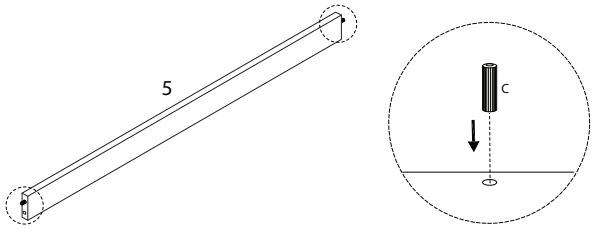

5

1	A
x 1	x 6

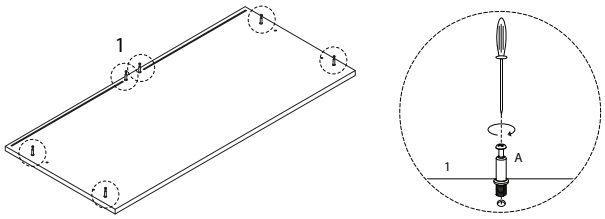

4

B
x 6

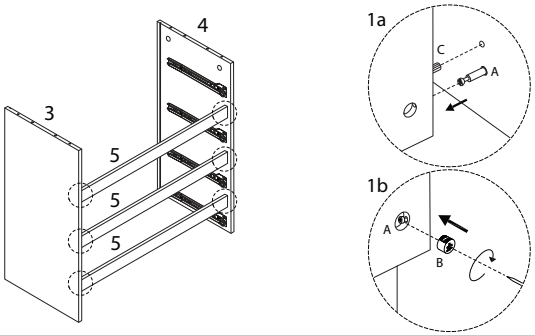

1444/BLYTHE/060525/

6

10	I	J
x 1	x 1	M4 x 12 x 1

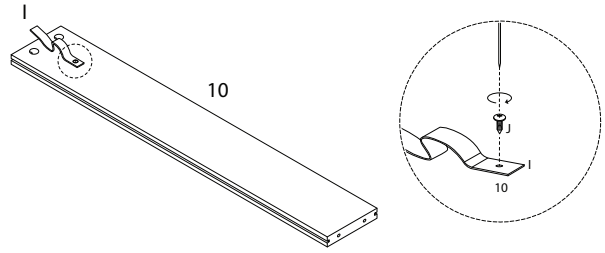

1444/BLYTHE/060525/

7

B

x 2

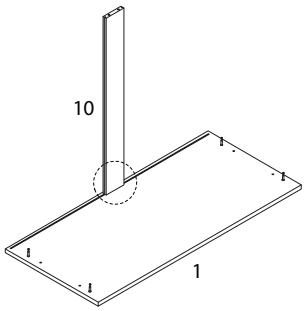

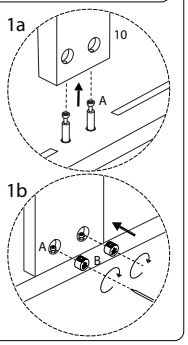

8

C

x 4

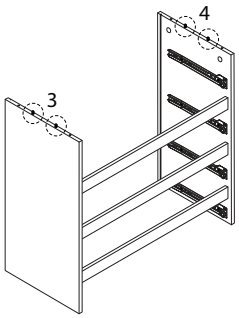

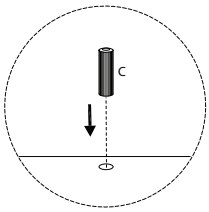

9

B

x 4

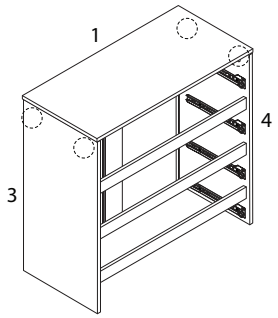

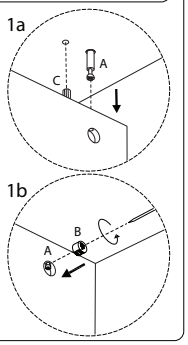

10

9

x 2

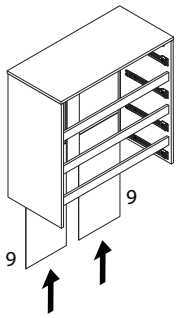

11

C

x 4

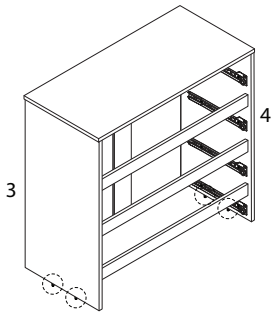

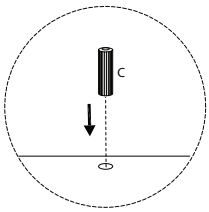

13

6

x 2

7

x 2

H

M6 x 30

x 4

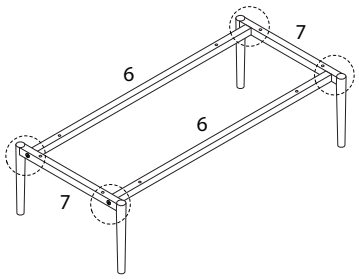

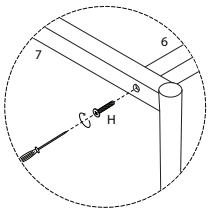

12

2

x 1

D

M4 x 40

x 6

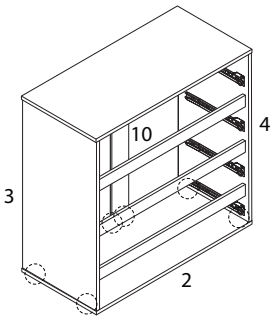

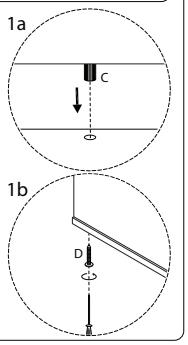

14

H

M6 x 30

x 8

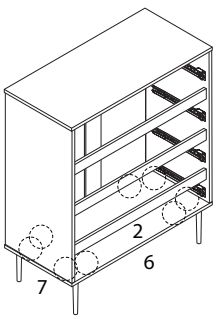

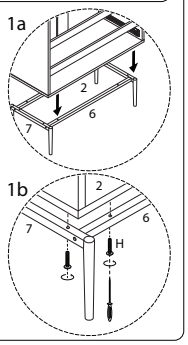

15 x 4

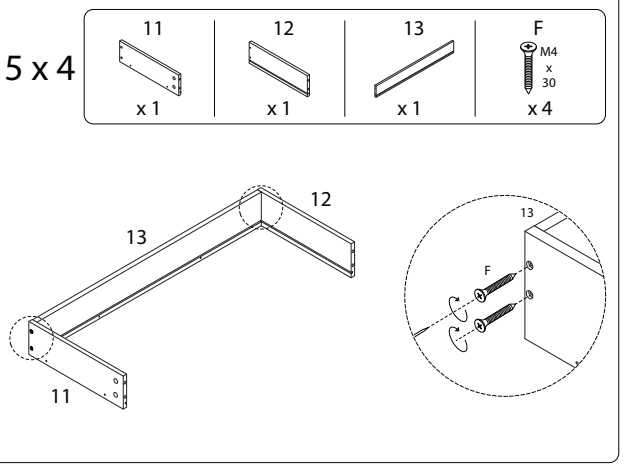

16 x 4

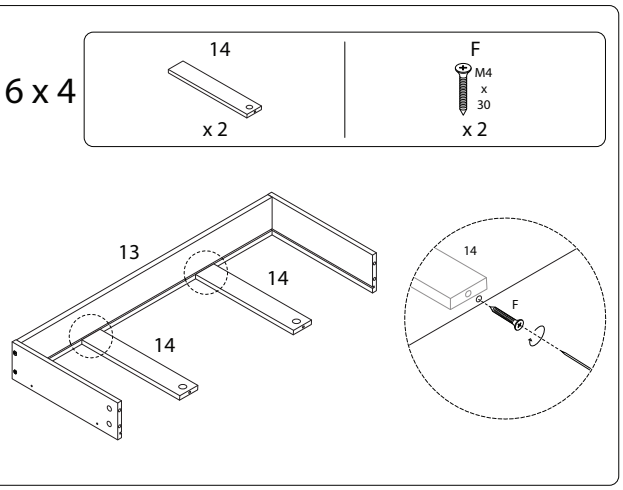

12/17

17 x 4

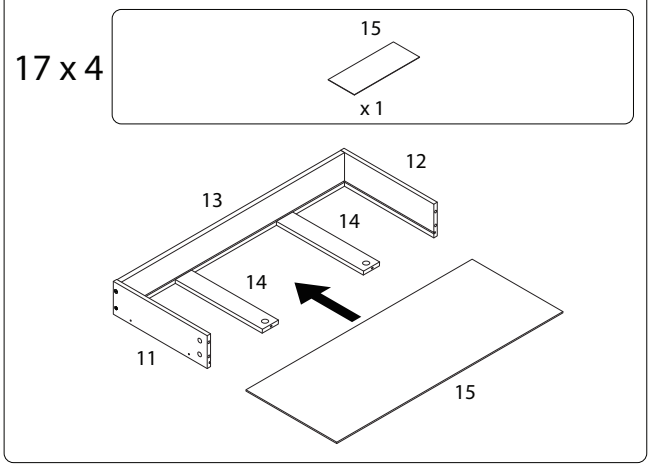

18

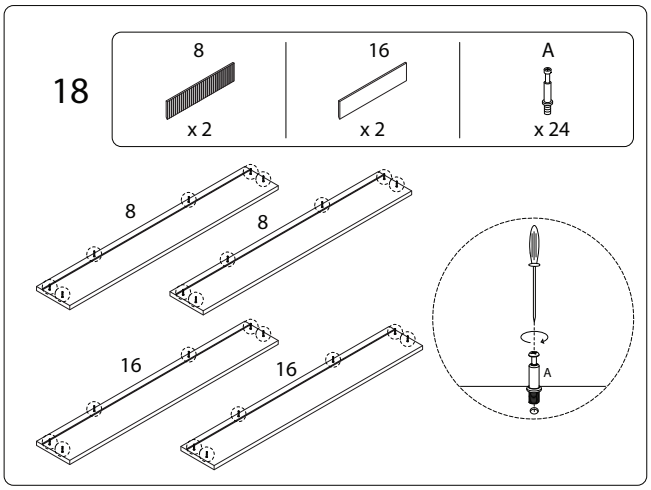

13/17

19 x 2

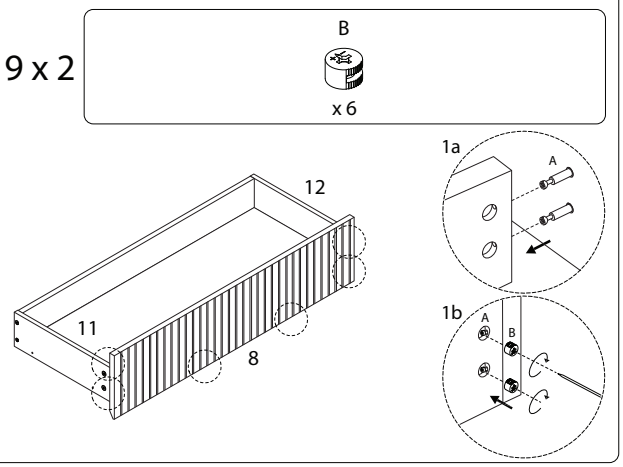

20 x 2

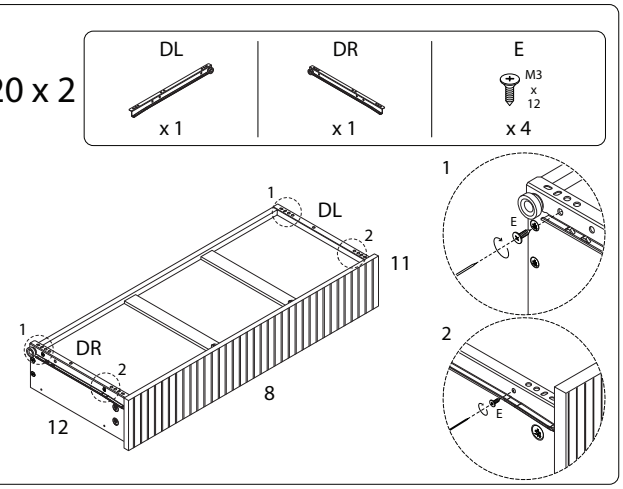

14/17

21 x 2

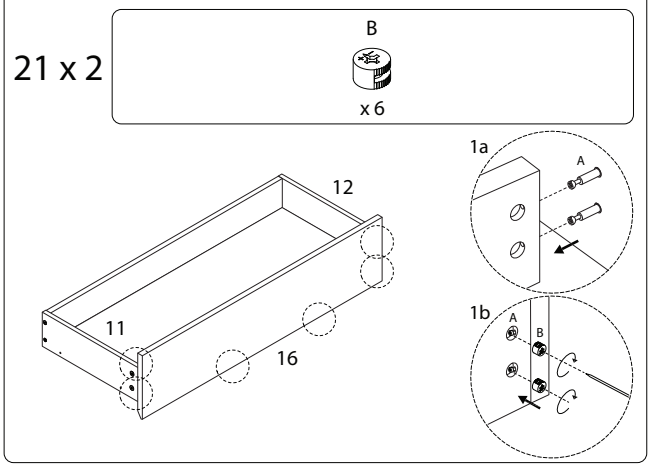

22 x 2

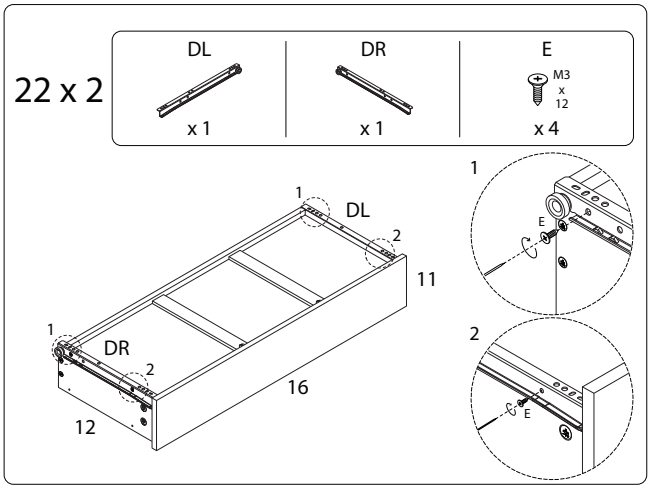

15/17

23

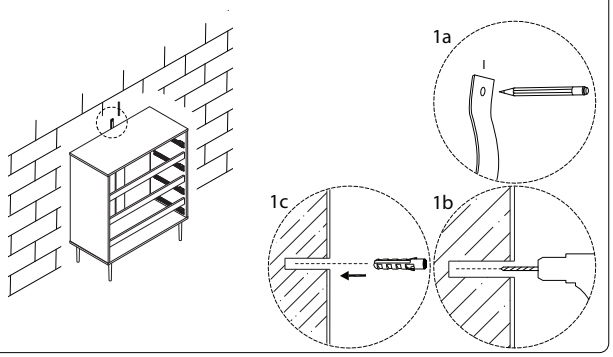

24

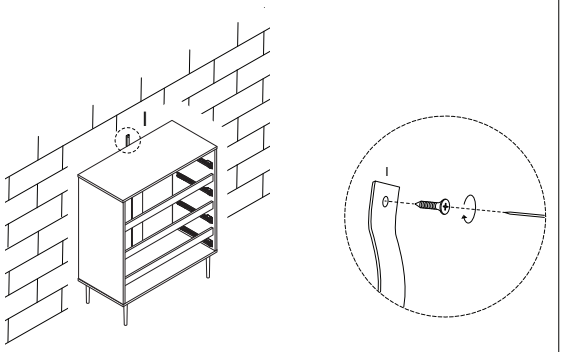

25

