ASSEMBLY INSTRUCTIONS

ITEM CODE : IN 3295

ITEM DESCRIPTION: 3 DRAWER CABINET

1

Reverse the cabinet & place the leg as shown & align the leg to match the apron.

2

Insert the Bolt to fix the leg with the cabinet top and tighten the nut with the washer as shown in fig1

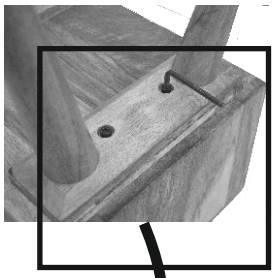

3

Fix the other leg in the similar way

4
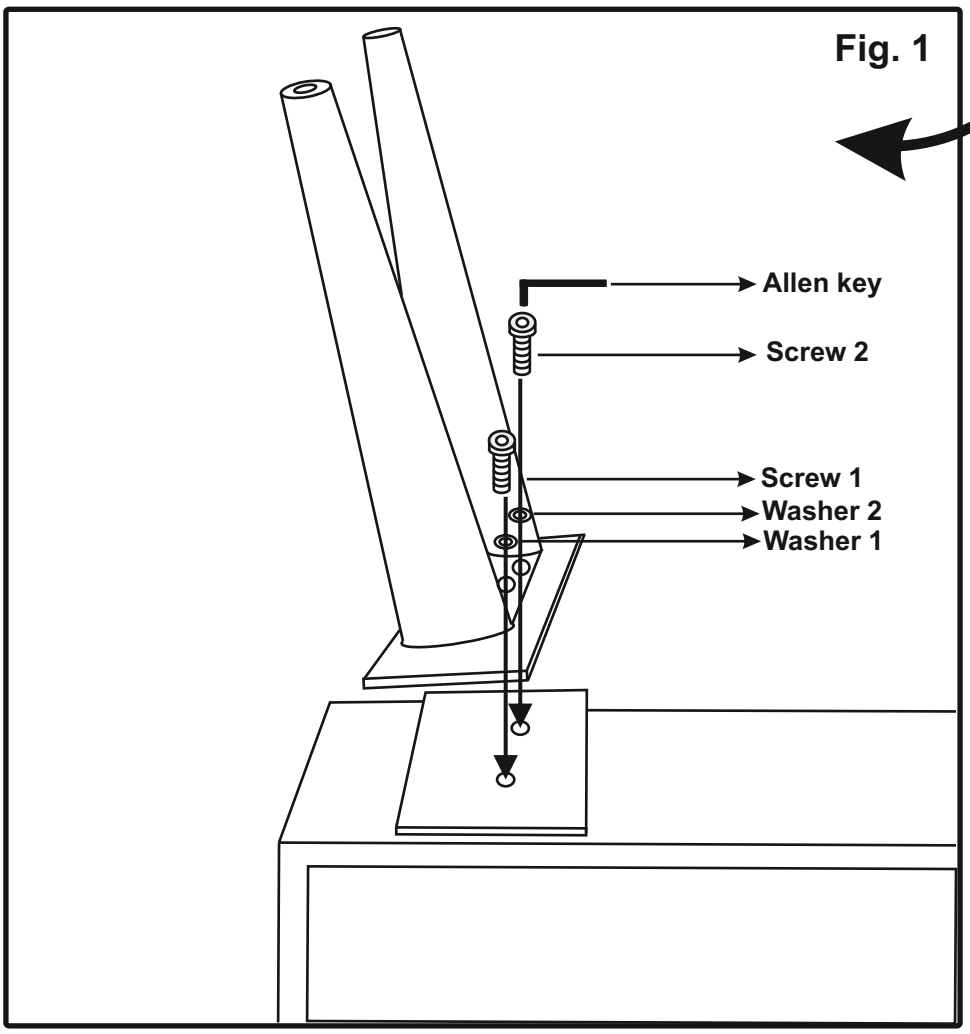
Reverse the cabinet straight. Now your cabinet is ready for use