

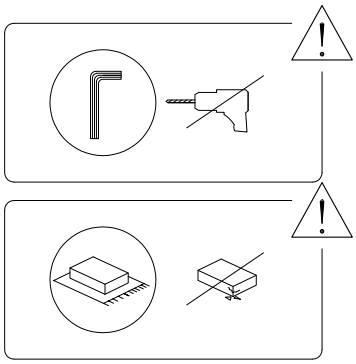


15'


1

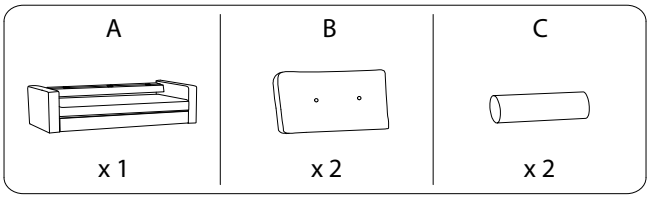
A
x 1
B
x 2
C
x 2

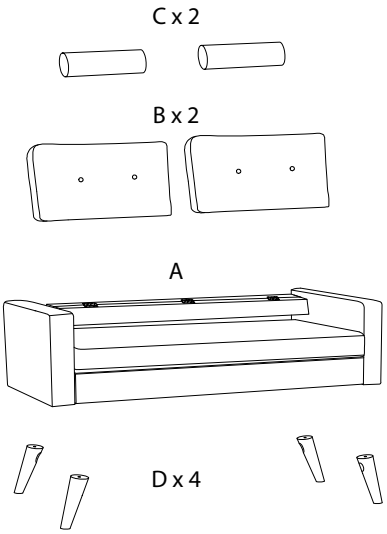
C x 2
B x 2
A
D x 4

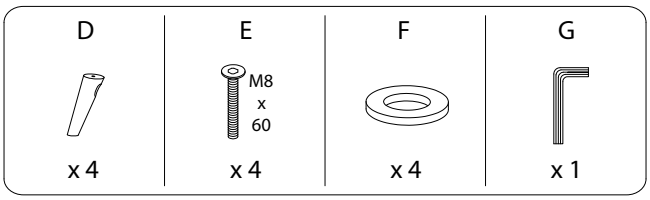
D
x 4
E
M8
x
60
x 4
F
x 4
G
x 1

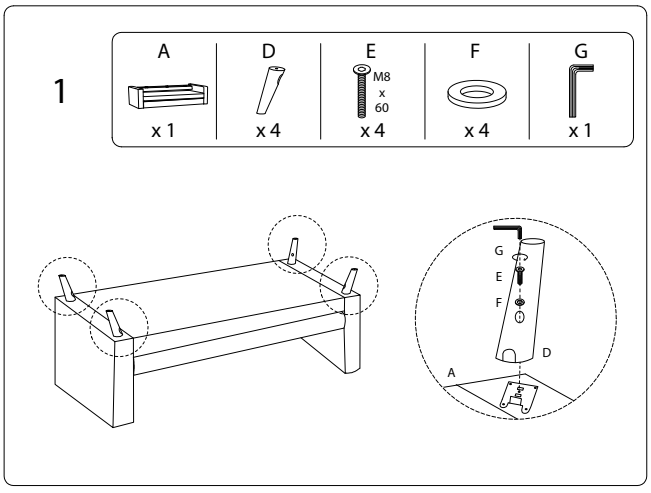
1
A
x 1
D
x 4
E
M8
x
60
x 4
F
x 4
G
x 1
G
E
F
D
A

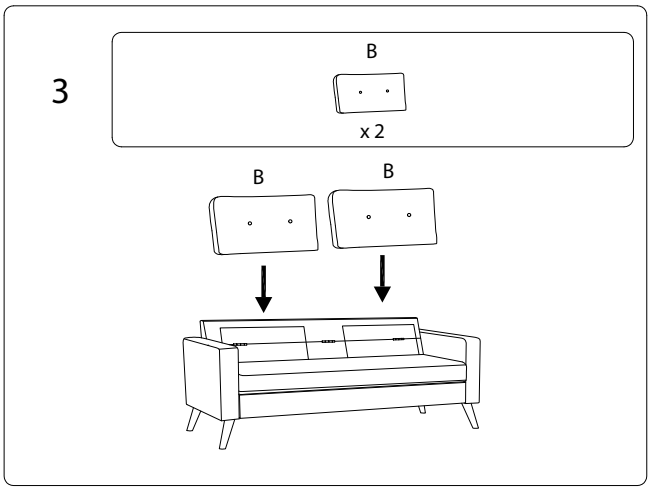
3
B
x 2
B
B

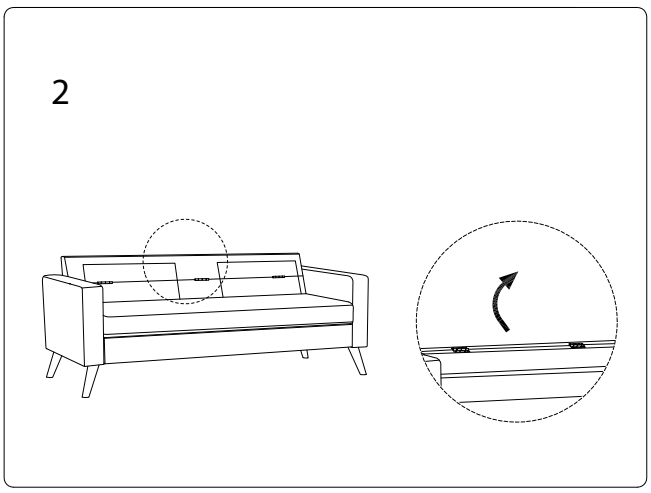
2

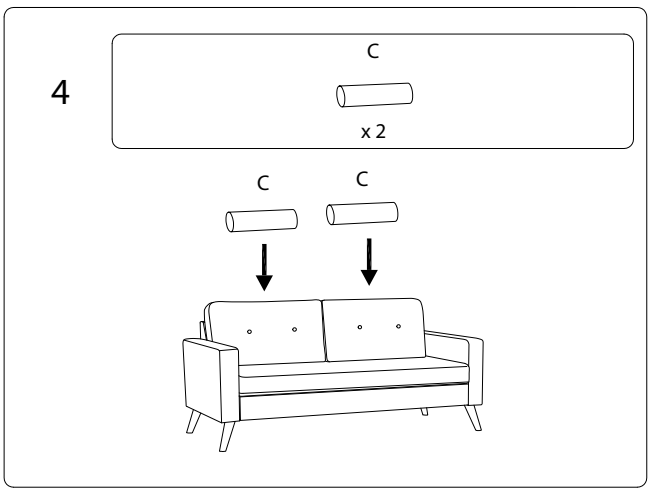
4
C
x 2
C
C