VOUZIERS

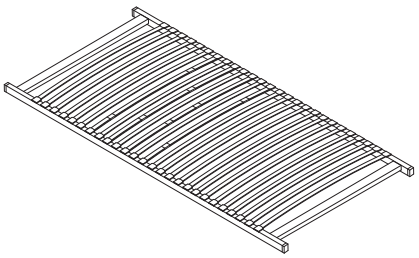

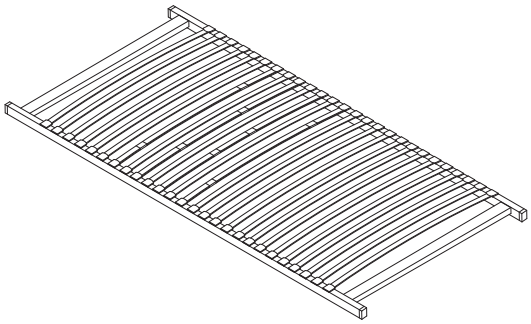

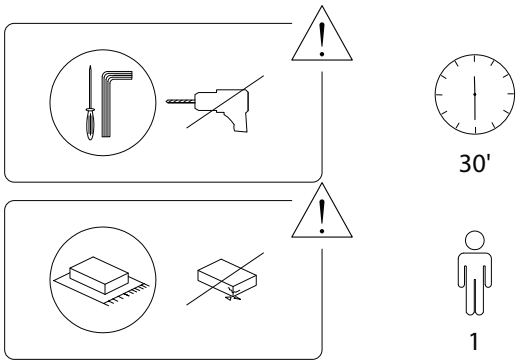

2369/VOUZIERS/050525/

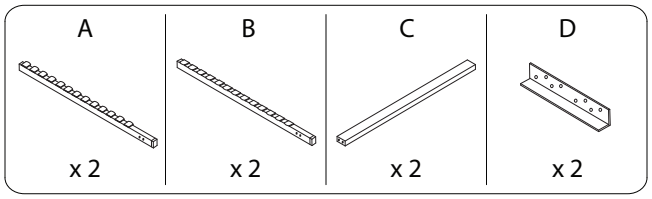

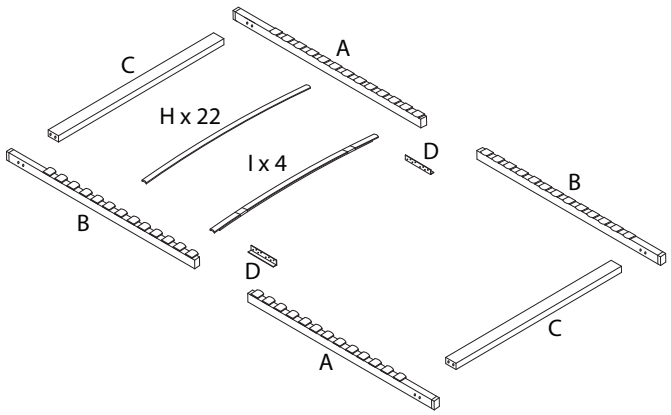

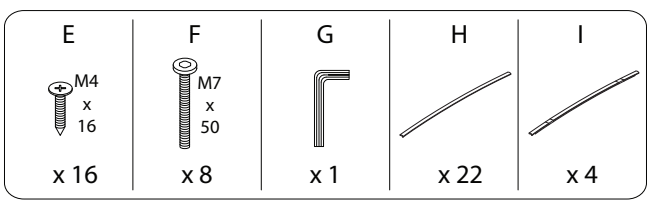

2369/VOUZIERS/050525/

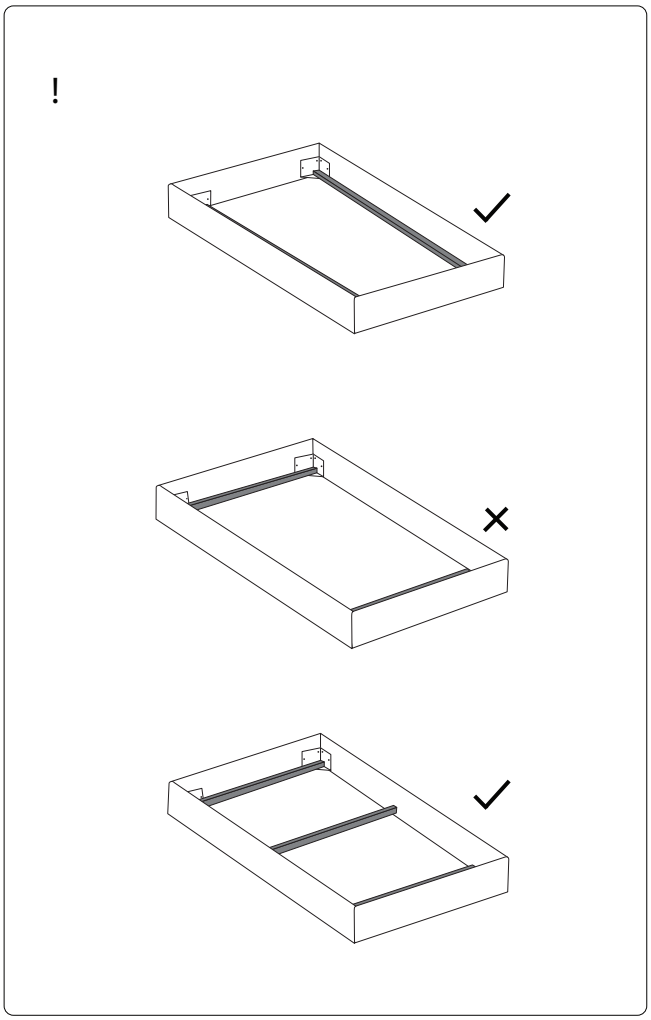

2369/VOUZIERS/050525/

1

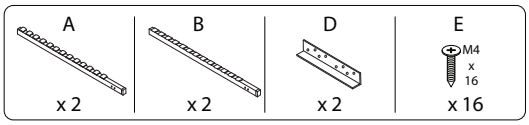
A
x 2
B
x 2
D
x 2
E
M4
x
16
x 16

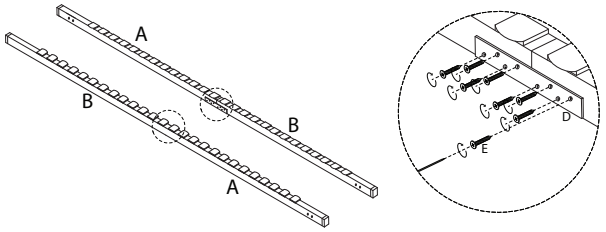
A
B
B
A
D
E

2

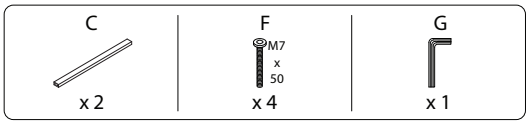
C
x 2
F
M7
x
50
x 4
G
x 1

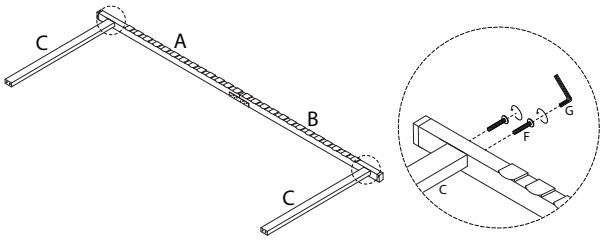
C
A
B
C
G
F
C

3

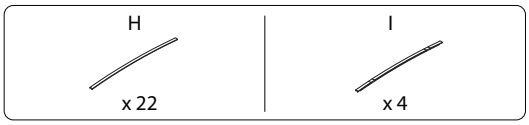
H
x 22
I
x 4

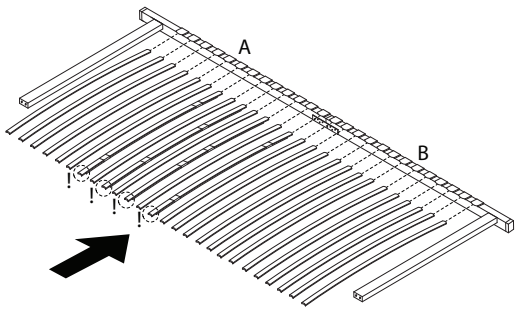
A
B

4

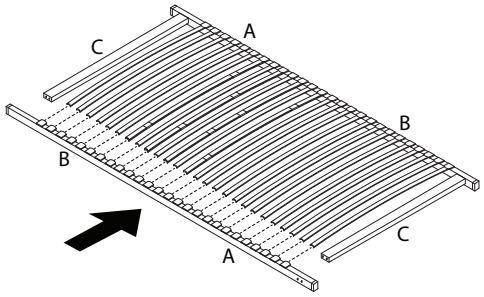
C
A
B
B
C
A

5

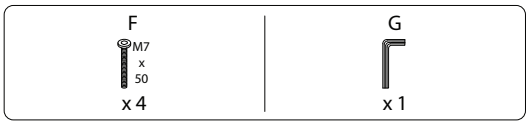
F
M7
x
50
x 4
G
x 1

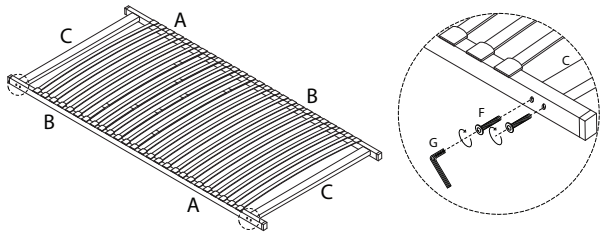
C
A
B
B
A
C
C
F
G

!

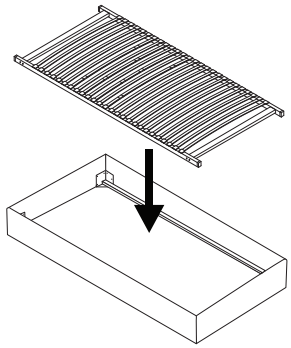

!

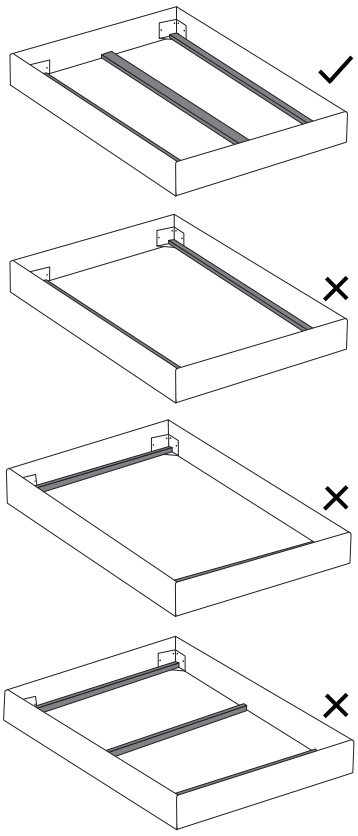

!

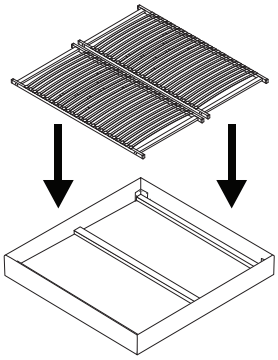

2369/VOUZIERS/050525/