CHADENET



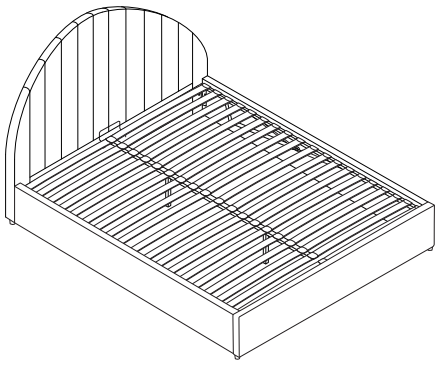

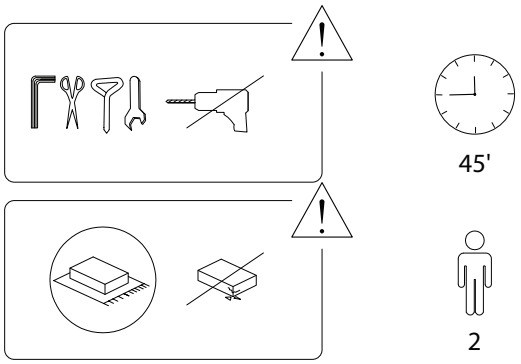

1/13

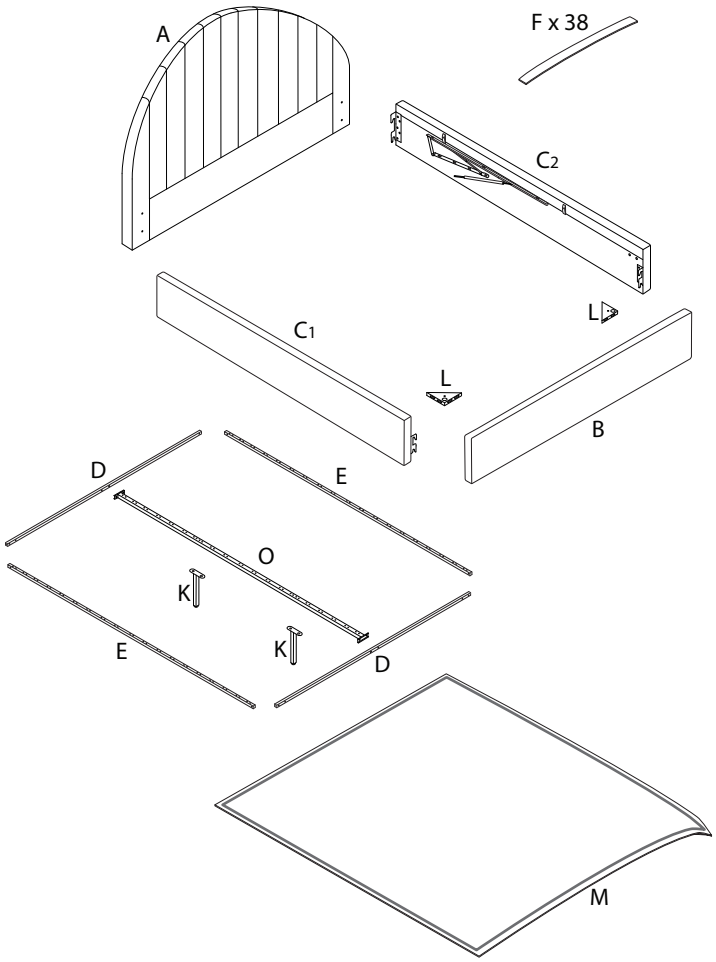

2/13

A x 1	B x 1	C1 x 1
C2 x 1	D x 2	E x 2
F x 38	G x 38	H x 19
I x 4	J x 4	K x 2
L x 2	M x 1	N x 1

3/13

O	P	1
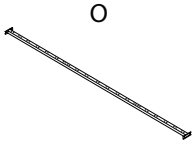		
x 1	x 1	x 16
2	**3**	**4**
		
x 14	x 14	x 8
5	**6**	**7**
		
x 8	x 1	x 1
8	**9**	**10A**
		
x 1	x 4	x 8
10B		**11**
		
x 8		x 2

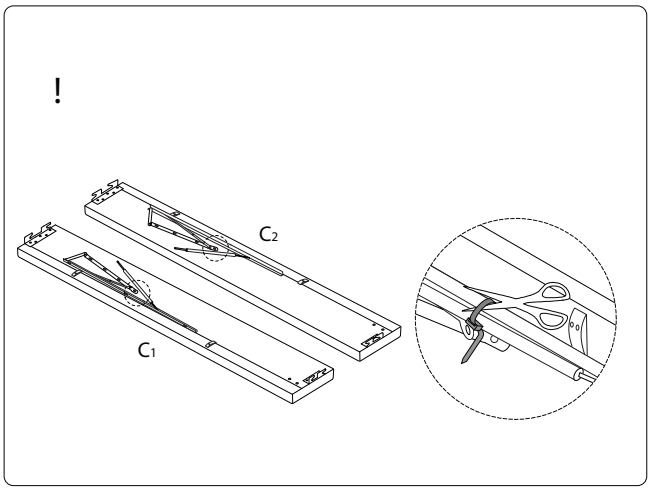

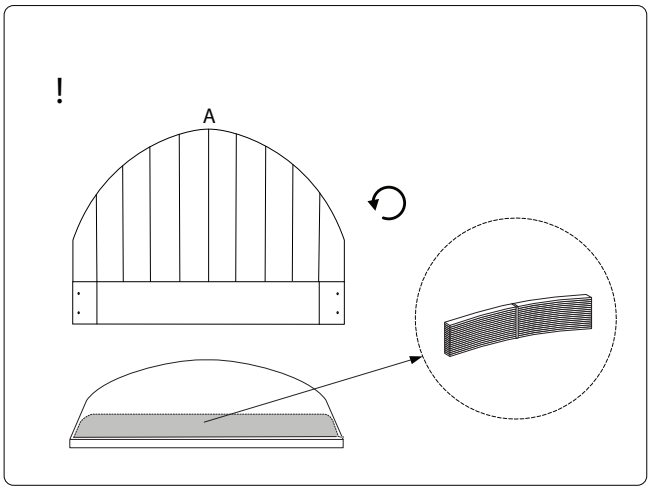

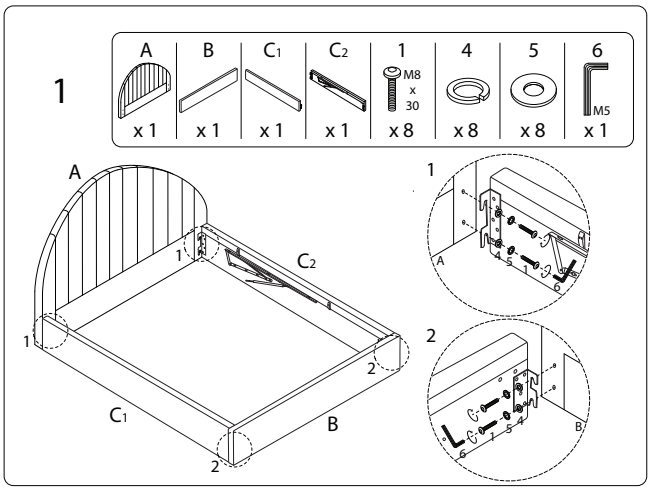

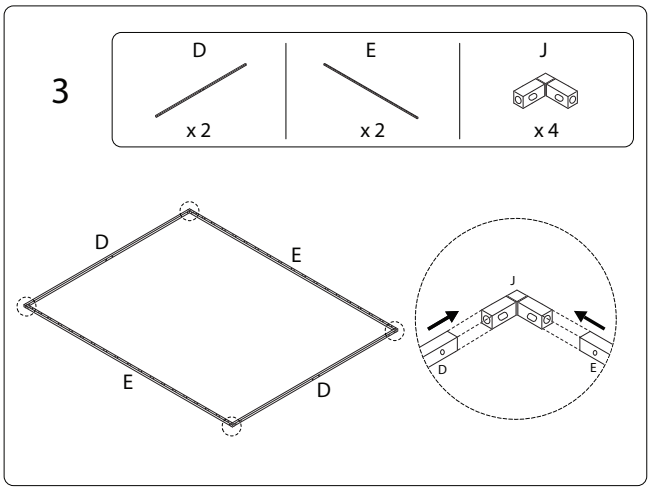

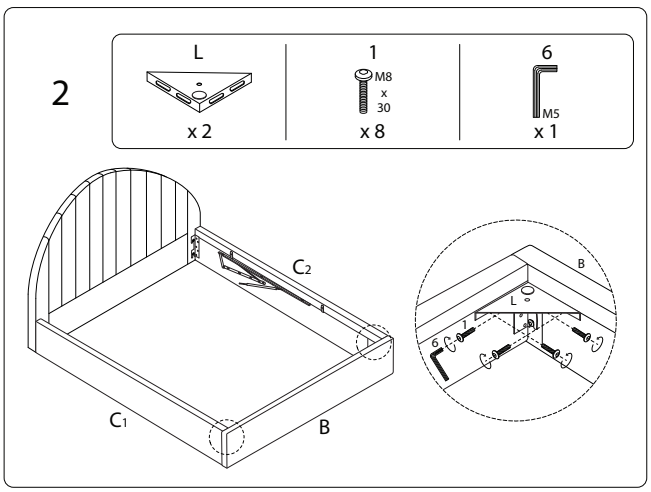

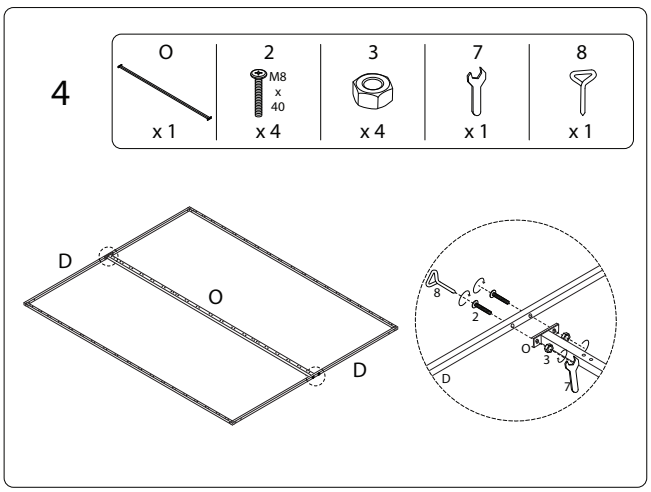

5

10A	10B	11
M6 x 20		M4
x 8	x 8	x 2

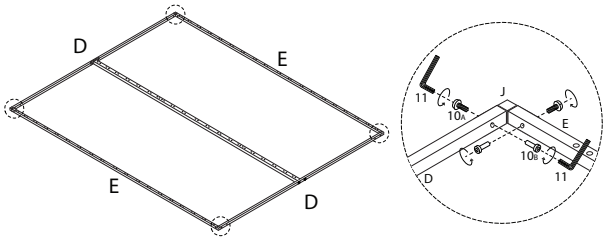

6

8
x 1

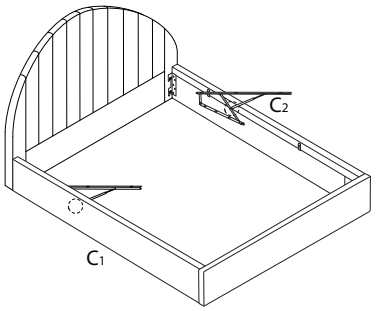

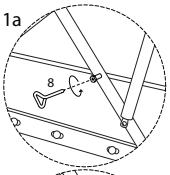

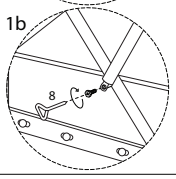

2138/CHADENET/190724/

7

M
x 1

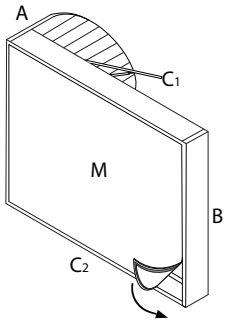

8

I	8	9
x 4	x 1	M4 x 40 x 4

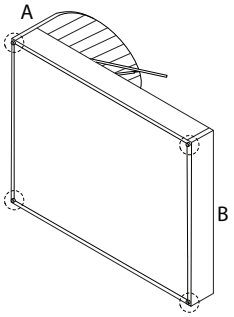

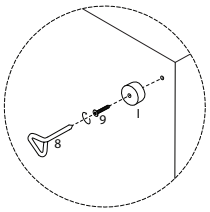

2138/CHADENET/190724/

9

2	3	7	8
M8 x 40			
x 6	x 6	x 1	x 1

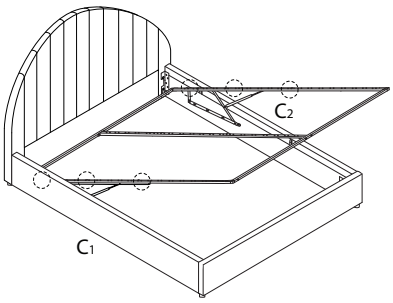

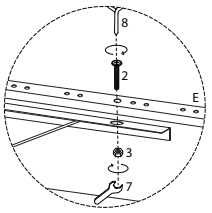

11

N
x 1

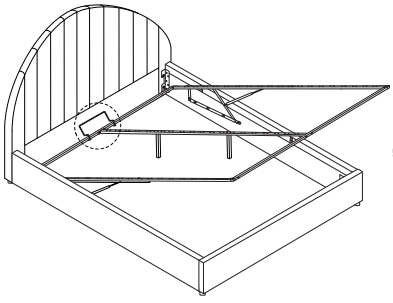

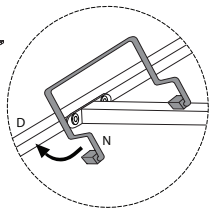

10

K	2	3	7	8
	M8 x 40			
x 2	x 4	x 4	x 1	x 1

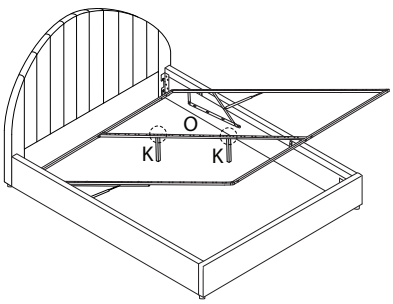

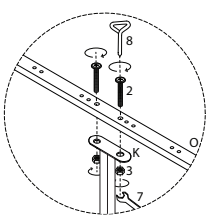

2138/CHADENET/190724/

!

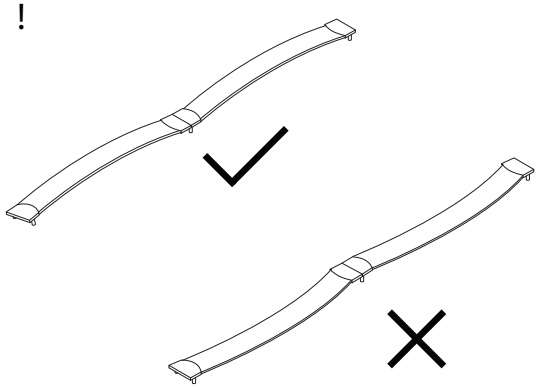

2138/CHADENET/190724/

12 x 19

F	G	H
x 2	x 2	x 1

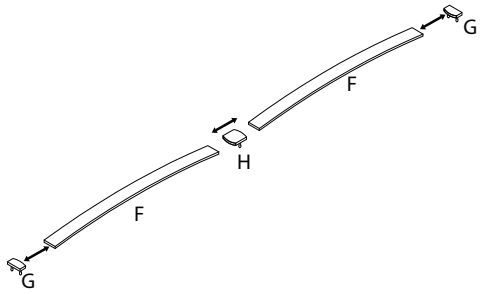

14

P
x 1

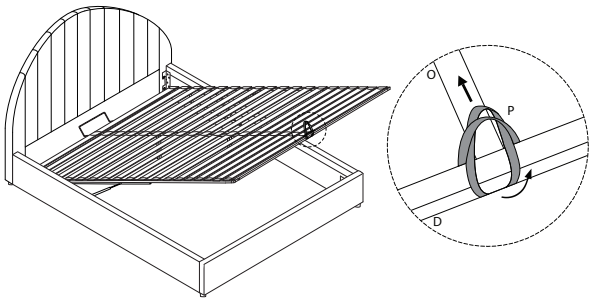

13

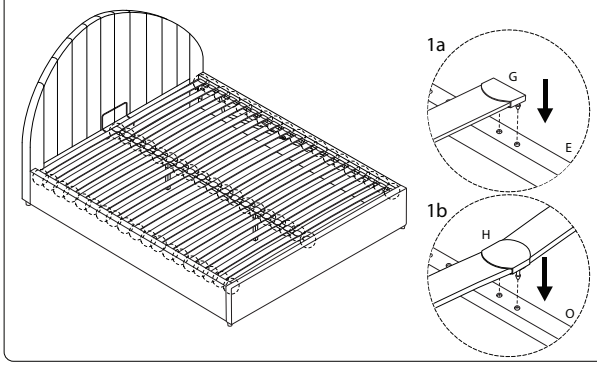

2138/CHADENET/190724/

2138/CHADENET/190724/