SAVAR

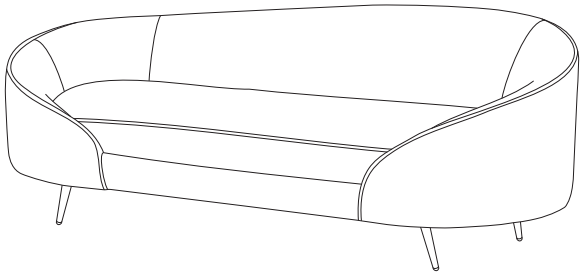

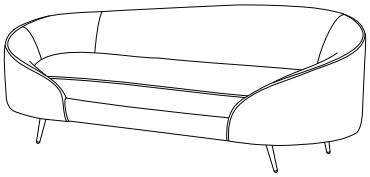

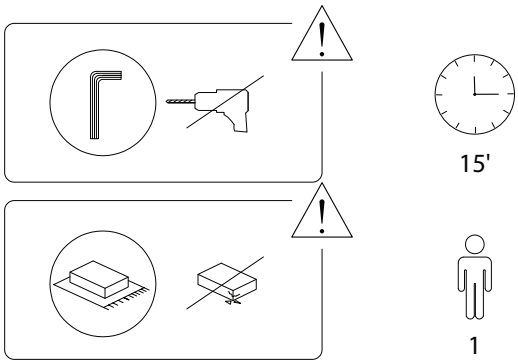

1/3

1919/SAVAR/170325/

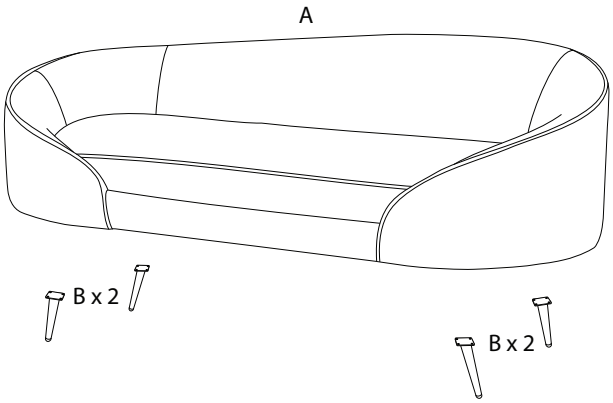

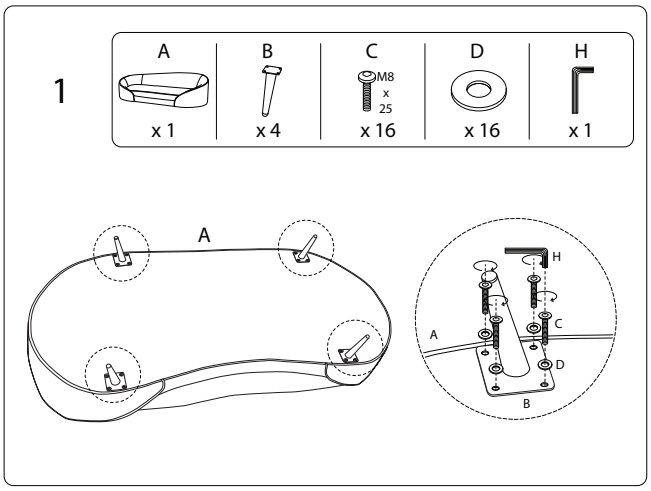

A	B	C	D	H
x 1	x 4	M8 x 25 x 16	x 16	x 1

2/3

3/3

1919/SAVAR/170325/