TIRANO

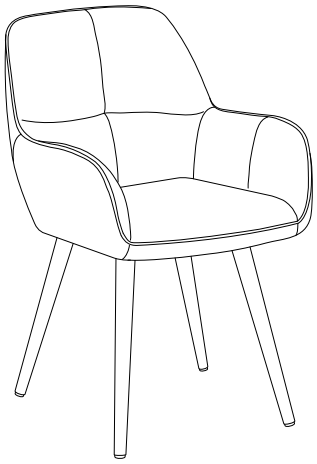

1/6

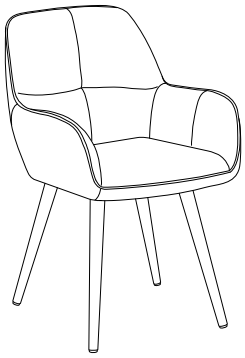

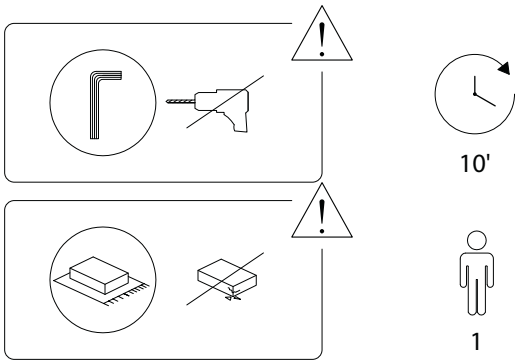

2/6

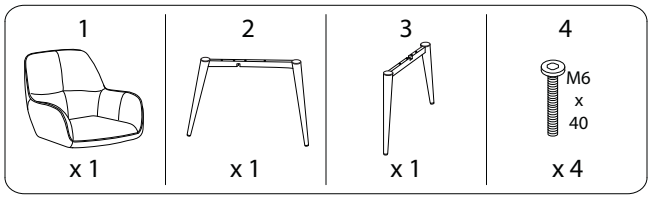

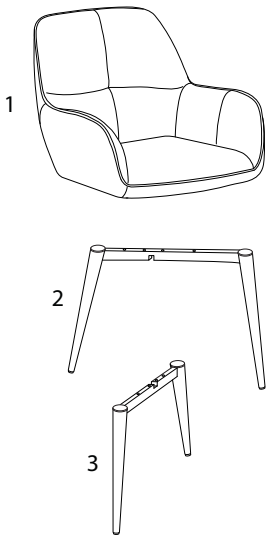

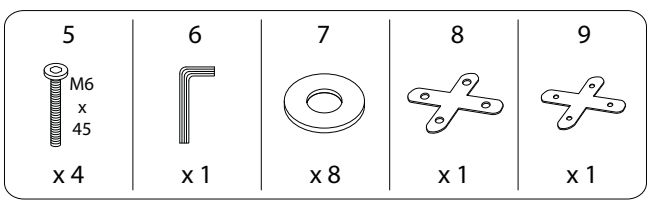

3/6

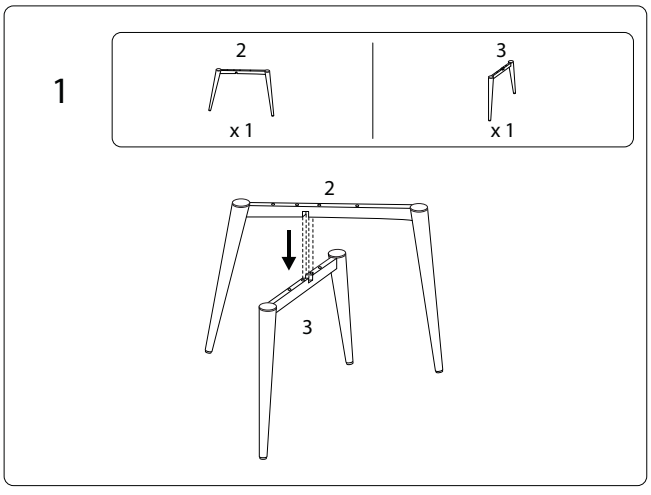

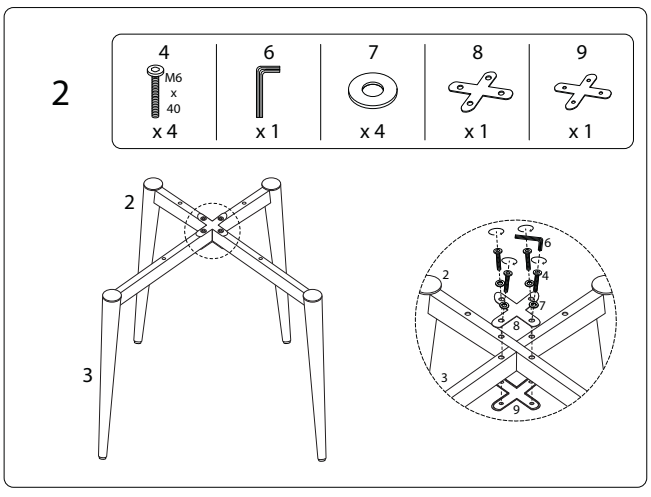

4/6

3

1	5	6	7
x 1	M6 x 45 x 4	x 1	x 4

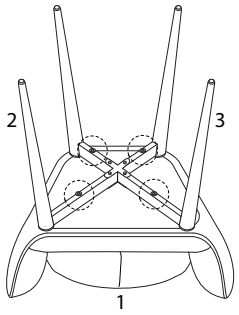

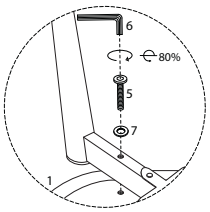

4

6
x 1

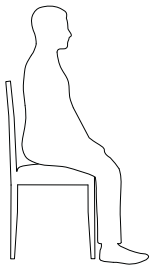

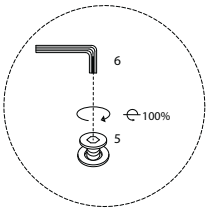

!

