LIMERICK

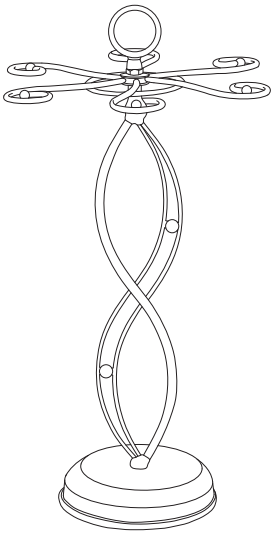

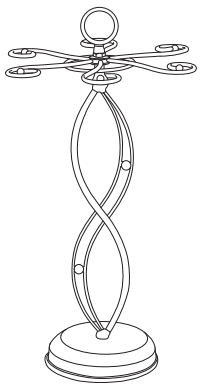

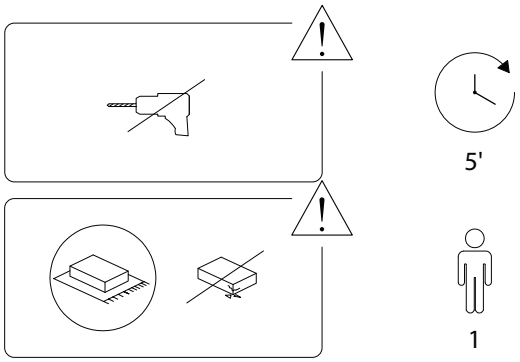

1/4

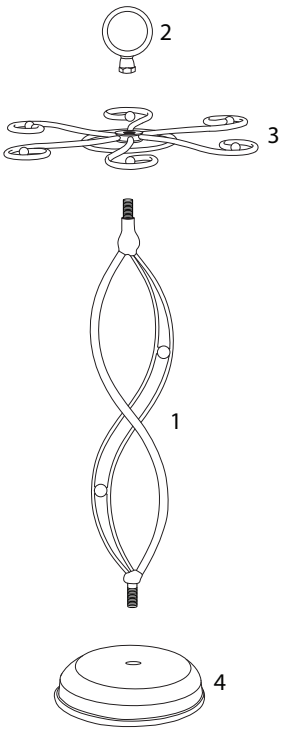

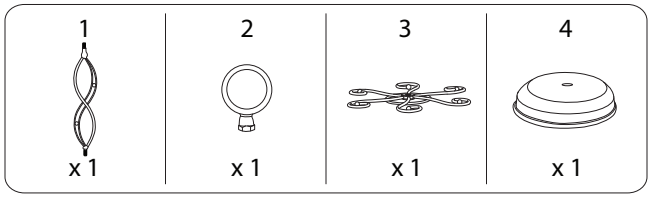

2/4

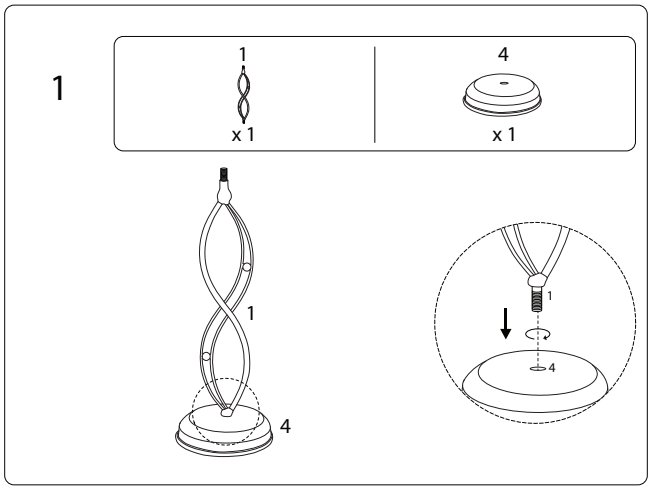

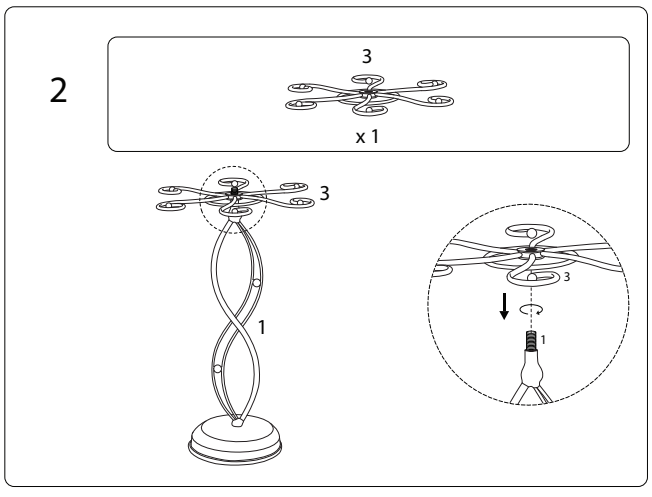

3/4

3

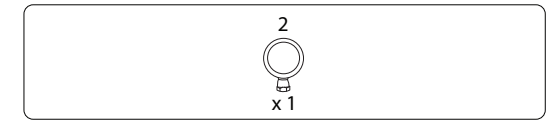

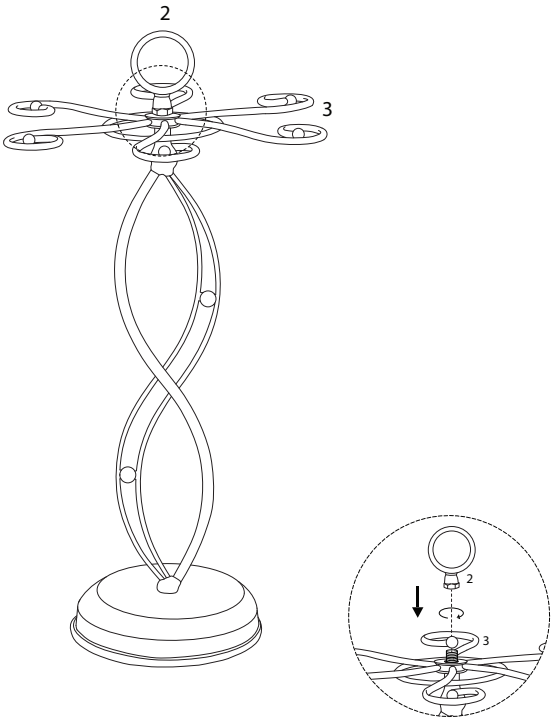

1126/LIMERICK/120825/