DELMAS

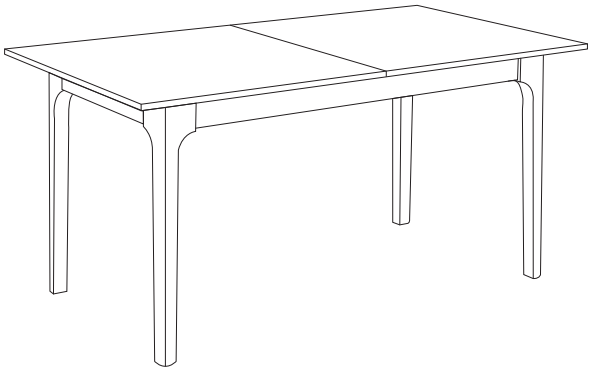

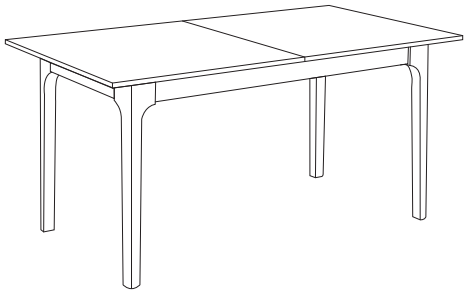

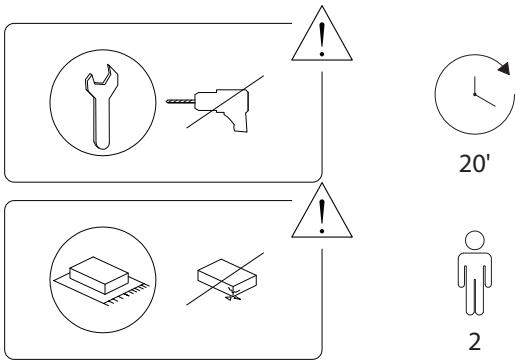

1/4

1762/DELMAS/190825/

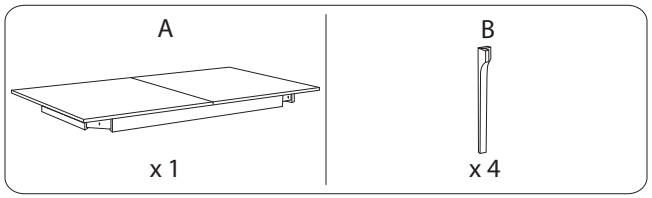

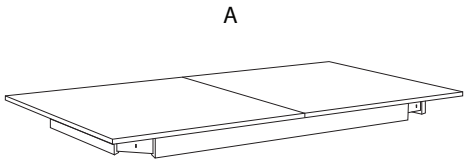

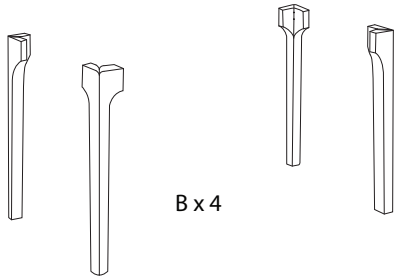

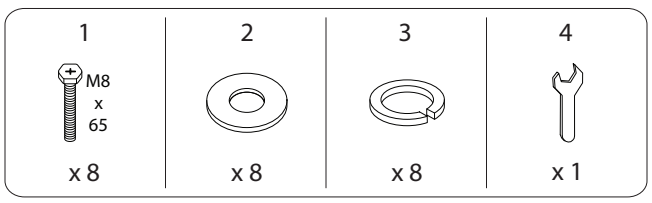

2/4

1762/DELMAS/190825/

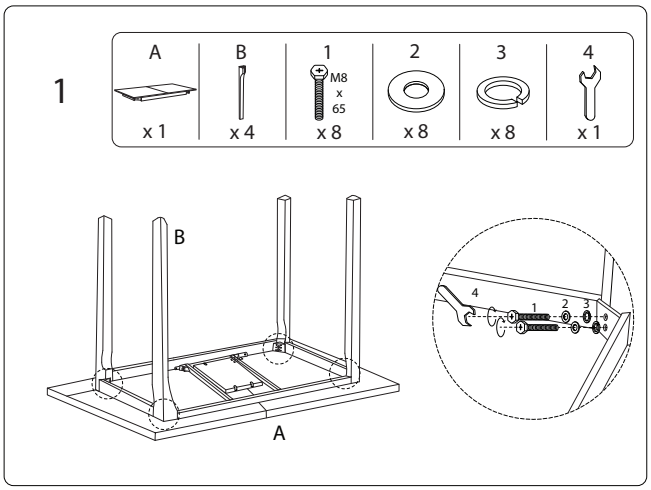

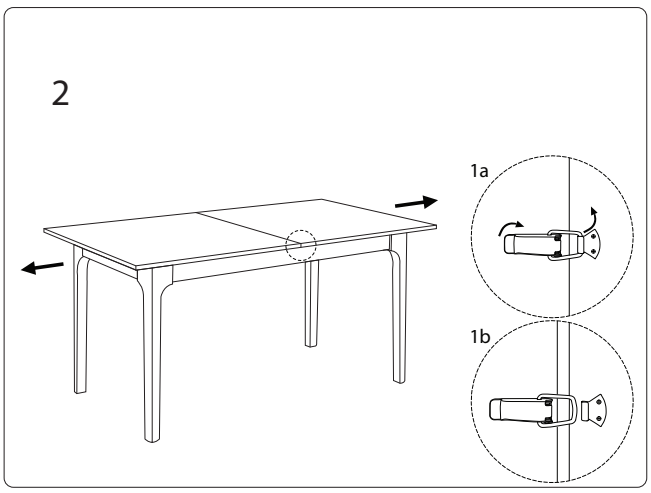

3/4

1762/DELMAS/190825/

3

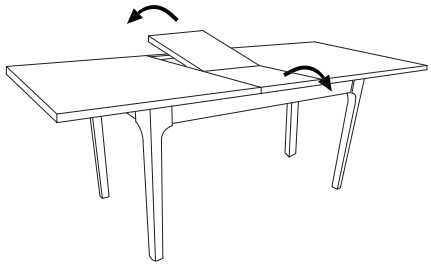

4

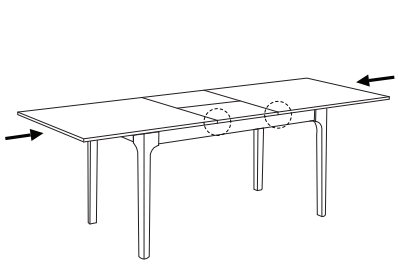

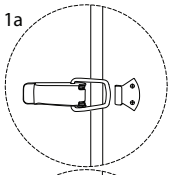

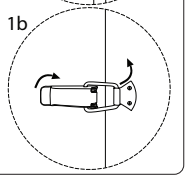

1762/DELMAS/190825/